NOBEL
SOLAR INNOVATIONS

Thus quality is signed!

TECHNICAL MANUAL

Solar water heaters NOBEL®

Installation, maintenance & use instructions

CONTENTS

NOBEL, Xilinakis D. & Co Industry is active in the Solar Energy Field since 1975, always with high-tech equipment, ultra-modern facilities and certified products of high quality. Our experience and know-how support our co operations, before and after sales, both in Greece and abroad.

In the present manual you will find all necessary instructions with regard to the installation, operation and maintenance of NOBEL Solar Water Heaters.

Nowadays, the necessity for production and saving of energy without at the same time polluting the environment has become common knowledge. The planet's conventional energy resources are diminishing to a threatening level as our society's energy requirements are increasing, generating pollutants that affect the climate's balance.

Renewable energy sources promise a solution to the energy problem as well as to pollution. Gradually, the international legislation is changing and encouraging - or even imposing - the use of alternative energy products, with the aim to satisfy energy requirements without endangering the environment.

DOMESTIC HOT WATER CONSUMPTION

Statistically, it is estimated that the mean family consumption is 35 to 50 litres daily per person. If we add the consumption of a washing machine and a dishwasher, when these are connected to the solar water storage tank, then each requires 20 litres per day (per wash).

Thus, a family of four, for example, with a mean hot water consumption of 40 litres per person, needs an 160 litres solar water heater. If household appliances connected to the solar water heater are added, then the demand increases by at least 40 litres daily. In order to take full advantage of the solar water heater, maximum use of hot water should be made during daytime, so that the system can continuously produce hot water during the daylight hours, maintaining thus its maximum efficiency.

SOLAR WATER HEATER OPERATION - WATER HEATING

The collecting surface absorbs solar energy and heats the liquid (water or antifreeze mixture) that circulates in the water element. This liquid when heated becomes lighter and is directed to the water storage tank where it heats the water. The flow of the collector's liquid is accomplished naturally and not forced (thermosiphonic flow).
The factors that affect the temperature of the water supplied by a solar system are many and their values vary according to the season, the time of day and the location. Keeping in mind that the solar system is a system that is exposed to the weather conditions, basic parameters affecting its performance are the mains water temperature, the available solar energy and the ambient temperature. The mains water does not have a constant temperature throughout the year, being much colder in winter compared to summer. Considering 45°C as a satisfactory temperature for the domestic hot water (in order to fulfil the needs of a home) and based on statistic values, in winter the temperature of the mains water has to be increased by approximately 35°C, whereas during the summer the increase is 20°C.
Similarly, the available solar energy does not remain the same throughout the year, being much less in the winter months than in the summer months. During periods of reduced sunlight and low ambient temperatures, the solar water storage tank assures the preheating of the water and is assisted by an electrical heating element or the central heating water storage tank (triple action solar water storage tanks). As far as night-time temperature losses are concerned, these are limited as much as possible by the solar system's powerful thermal insulation. They are nevertheless affected by ambient temperatures, which vary depending on the location and the weather.

SOLAR WATER HEATERS

RELIABILITY - HARMONY - AESTHETICS

NOBEL Solar Systems constitute an ecological proposal and an effective energy solution, combining high output, autonomy, aesthetics, facility in the installation and money saving. They are made of excellent materials according to international specifications and have all the certifications and tests that confirm their quality.

They are **highly aesthetic systems**, which can be simply and quickly installed to blend with the traditional or modern architecture of a building and to provide free hot water almost the whole year round. Even in regions with low sunlight they achieve the preheating of the water, which contributes to a drastically reduced consumption of conventional energy.

With the use of solar systems, thermosiphonic or forced circulation, is achieved energy **saving of 70-100%**. At the same time the operation time of the water tank or electric resistance is decreased, depending on the sunlight of each region and the system's size, with simultaneous reduction of emission of carbon dioxide.

LABELING

NOBEL solar water heaters are identified by two labels, one of them on the tank and the other on the collector. On these one can find all the details of the system. The information provided is important for the future identification of the system.

PACKAGING

PRODUCT RANGE

APOLLON series thermosiphon systems are available in the following models:

MODEL	DESCRIPTION
NOBEL 120/2	120lt tank, 2m² collector
NOBEL 160/2	160lt tank, 2m² collector
NOBEL 160/2.6	160lt tank, 2.6m² collector
NOBEL 160/3	160lt tank, 2 x 1.5m² collector
NOBEL 200/2.6	200lt tank, 2.6m² collector
NOBEL 200/3	200lt tank, 2 x 1.5m² collector
NOBEL 200/4	200lt tank, 2 x 2m² collector
NOBEL 320/4	320lt tank, 2 x 2m² collector

1. Boiler
2. Collector(s)
3. Support base, fittings & Accessories
4. Palette

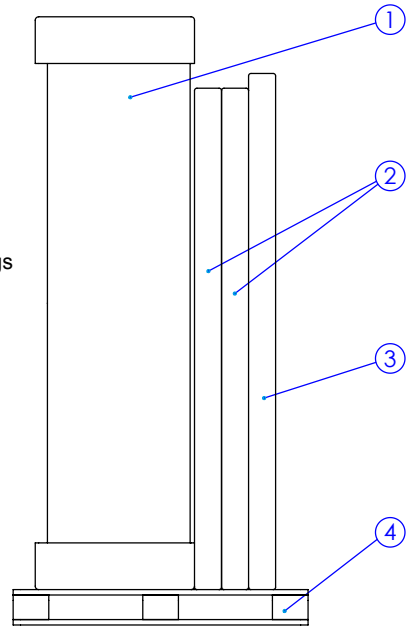

Each model packaging contains all the necessary equipment:

1. The water storage tank
2. The collector (s)
3. The support base system & fittings and accessories

The water storage tank is placed between two round styrofoam covers, which are tightened on the storage tank with stretch film. The collector is packed in a carton box. All the parts of the support base system, with the connection fittings, the antifreeze liquid and the other accessories are packed in a carton box. The fittings and the accessories of each appliance appears in the following table:

SOLAR WATER HEATERS FITTINGS & ACCESSORIES					
1 COLLECTOR			2 COLLECTORS		
	Quantity	Description		Quantity	Description
	2 PCS	ELBOW Ø22 COPPER X DN16 INOX		2 TEM.	T-PIECE Ø22 COPPER X DN16 INOX X Ø22 COPPER
	1 PC	FEMALE CONNECTOR 3/4 X DN16		2 PCS	FEMALE CONNECTOR 3/4 X DN16
	1 PC	ELBOW FEMALE CONNECTOR 3/4 X DN16		1 PC	ONE WAY SAFETY VALVE 10 bar
	2 PCS	END CAP Ø22		1 PC	CLOSED LOOP SAFETY VALVE 3.5 bar
	1 PC	ONE WAY SAFETY VALVE 10 bar		2 PCS	INOX TUBE DN16
	1 PC	CLOSED LOOP SAFETY VALVE 3.5 bar		1 PC	INSULATION ARMAFLEX Ø22
	2 PCS	INOX TUBE DN16		3-5 PCS.	ANTI-FREEZE LIQUID 1lt
	1 PC	INSULATION ARMAFLEX Ø22			
	2 PCS	ANTI-FREEZE LIQUID 1lt			

WATER STORAGE TANK SPECIFICATIONS

STEEL - ENAMEL

1. **Water tank:** 2.5mm thickness cold rolled steel with a double internal layer of enamel, fired at 860°C according to DIN 4753. The enameling is done in our own high tech industrial facilities. The water storage tanks are checked individually upon exit from the enameling unit, assuring the top quality of the enamel.
2. **Surrounding heat exchanger (Jacket)** with internal expansion tank of cold rolled steel, for the operation of the closed loop, which is compulsory at low temperatures and also in areas with water with high mineral content.
3. **Thermal insulation:** the ecological, expanded polyurethane of high-density (>50kg/m^3) ensures minimum heat loss, maintaining the hot water temperature.
4. **External housing:** naval aluminium alloy.

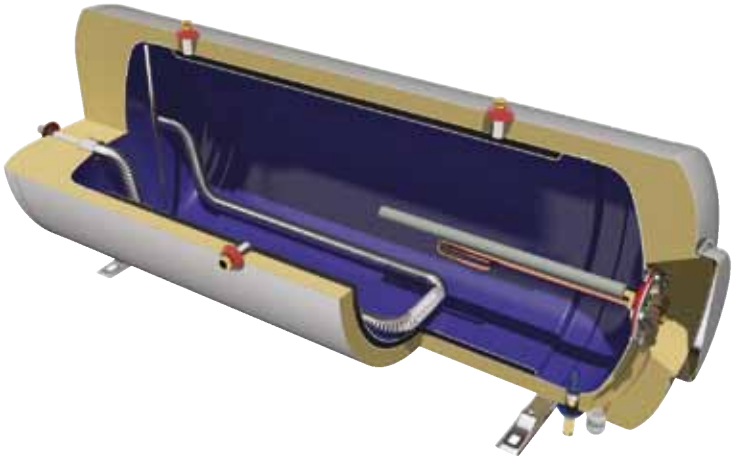

5. **Cathode protection** by magnesium anode Ø26x500mm/500gr for effective protection against corrosion and mineral deposits caused by electrolytic reactions.
6. **Large round galvanized steel flange rubber protected:** innovative, smart design for the quick cleaning of minerals, fast replacement of anode and immediate access to the electrical components.
7. **Complete sealing rubber** of silicone, non toxic material, which does not permit water to contact the flange, thus protecting it against electrolysis and corrosion, specially made to withstand the generally accepted specifications with regard to the heat resistance.
8. **Heating element** rated according to the country of destination local regulations. (Optional, for the use of electricity as an auxiliary power source). All electrical components carry the CE marking according to EN 60335-1 and EN60335-2-21 standards.
9. **Overheating protection** with closed loop connection through a stainless steel flexible hose.
10. **Automatic regulated thermostat** with bipolar protection and auxiliary fuse. All electrical components carry the CE marking according to EN 60335-1 and EN60335-2-21 standards.
11. **Protective cover:** designed to ensure the proper ventilation of the electrical section and its protection from the environmental conditions.

    Gland: for sealing the passage of the heating element's connection cable.
12. **Cold water inlet:** 1/2" BSP male threaded pipe end for water stratification and 10 bar safety valve for releasing pressure.
13. **Hot water outlet:** 1/2" BSP male threaded pipe end.
14. **Jacket inlet:** 3/4" BSP male threaded pipe end.
15. **Jacket outlet:** 3/4" BSP male threaded pipe end.
16. **3.5 bar safety valve connection location:** brass 1/2" BSP male threaded pipe end.
17. **Closed loop circuit filling point:** brass 1/2" BSP male threaded pipe end.
18. **Heat exchanger** with 3/4" BSP female threaded pipe ends, made of stainless steel house, large exchange surface (160lt & 200lt: 0.38m^2, 320lt: 0.76m^2) for use of the heating produced by central heating systems during the winter (optional)

COLLECTOR APOLLON AL SPECIFICATIONS

Solar Keymark Certified

E 22

1. **External one piece aluminium** trough of high aesthetics, shaped by deep drawing method in 400 tn capacity press, made of naval aluminium alloy, rich in magnesium. Robust construction for perfect tightness.
2. **High density, eco-friendly thermal insulation** achieved with a 60mm thick layer of prepressed rockwool with a covering of black glass fabric for the minimization of thermal losses.

   Rockwool insulation thermal conductivity: λ=0.035 W/m grd (DIN 56612, measured at 0°C)
3. **Water frame of copper pipes** of suitable gauge and thickness (headers: Ø22, manifolds: Ø8) **Headers are punched with upper expansion**, for perfect manifolds fitting, thus avoiding pressure drop in the collectors.

   (tube pitch) = 93mm (EN 1652).
4. **Sun-Selective complete area absorber** made of selective aluminium sheet with a special titan coating formed in vacuum,of high absorbency and low radiation, covers the complete window area as well as the headers, thus increasing the collector's absorbency, Laser Welded to the water frame.
5. **Special plastic parts** for supporting and sealing the water frame to the trough, specially designed for the **collector's ventilation**, with sensor supporting option.

   Special silicone rubber seals **allow fluctuation of the absorber's length** (contraction - expansion) in a -40°C to +200°C temperature range.
6. **Tempered solar glass low iron**, with a stable coefficient of expansion and high light transmittance, can withstand adverse weather conditions (e.g. hail storm, extreme temperature changes, etc.).
7. **Solar glass rubber seal:** UV proofed
8. **Alluminium profile electrostatically painted** (Al Mg Si 05): for solar glass seating and supporting.

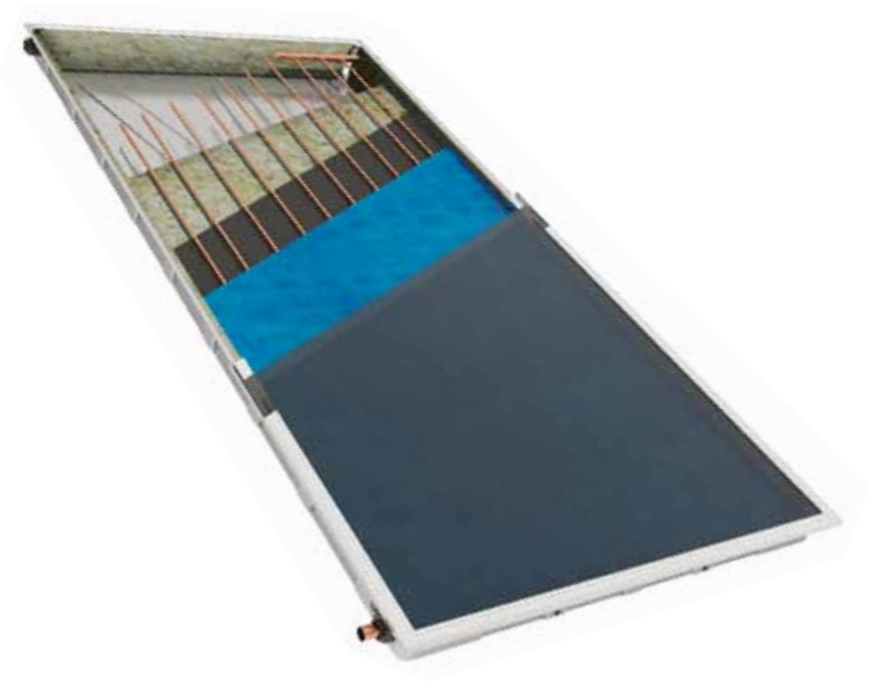

YEARLY ENERGY OUTPUT (kWh/m²)	
ATHENS - GREECE	614
DAVOS - SWITZERLAND	795
WÜRZBURG - GERMANY	571
STOCKHOLM - SWEDEN	535

Normal absorber design with louvers.
Air turbulence increases heat loss

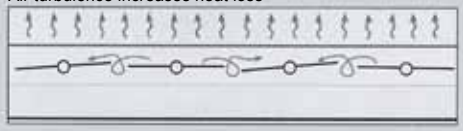

Complete area technology
The uniform area prevents heat loss

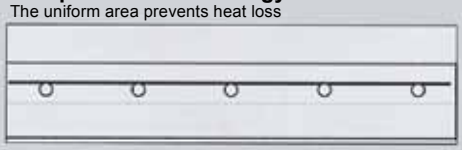

SUPPORT BASE

One type of supporting base system, electrostatically painted, made of 2.5mm thick galvanised steel, with stainless steel screws and nuts for installation on flat or inclined surfaces

FLAT SURFACE

INCLINED SURFACE

SOLAR WATER HEATER 120lt/2m²

120lt/2m²
FLAT SURFACE

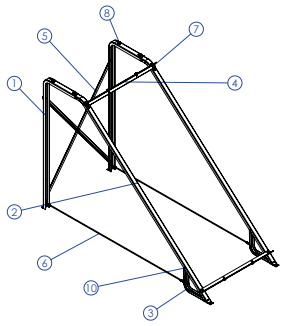

ITEM	PART NAME	DIMENSIONS	QTY.
1	Beam Π	100x2x1800mm	2
2	Beam Π	90x2x2550mm	2
3	Beam Π	80x2x500mm	2
4	Collector Support	870mm	2
5	Beam (Lam. section 33x2mm)	1400mm	2
6	Screw Rod	M8x1770mm	2
7	Hexagon Head Bolt M8	M8x20	13
8	Hexagon Head Bolt M8	M8x25	4
9	Hex Nut M8		25
10	Hexagon Head Bolt M6	M6x50	4
11	Hex Nut M6		4
12	Washer	Ø8	12
13	Washer	Ø10	4
14	Screw 8x60		4
15	Upat D10		4

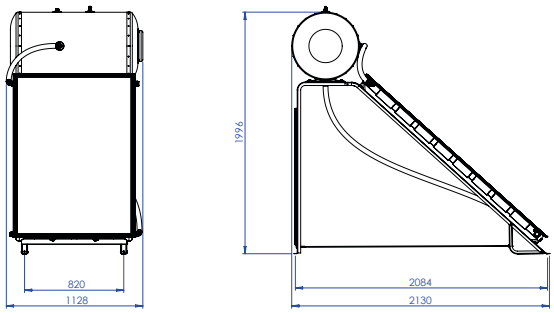

120lt/2m²
INCLINED SURFACE

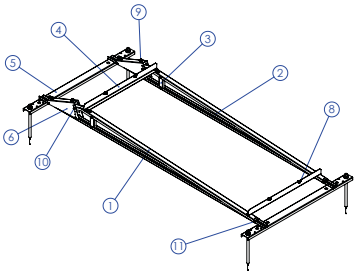

ITEM	PART NAME	DIMENSIONS	QTY.
1	Beam Π	90x2x2500mm	2
2	Beam Π	80x2x2690mm	2
3	Beam Π	90x2x135mm	2
4	Collector Support	870mm	2
5	Beam Π	125x1252mm	2
6	Angle Adjuster		2
7	Screw Rod	M20xØ9	4
8	Hexagon Head Bolt M8	M8x20	20
9	Hexagon Head Bolt M8	M8x25	4
10	Hexagon Head Bolt M8	M8x60	4
11	Hexagon Head Bolt M6	M6x50	2
12	Hex Nut M20		8
13	Hex Nut M8		26
14	Hex Nut M6		2
15	Washer	Ø20	8
16	Washer	Ø10	4
17	Washer	Ø8	12
18	Rivet with Thread	M8 FAR	2

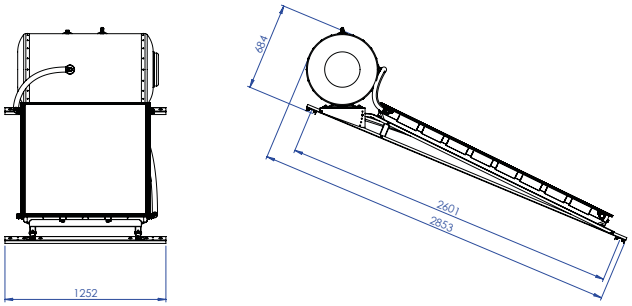

TOTAL SYSTEM	120lt/2m²
NUMBER OF COLLECTORS	1
SYSTEM WEIGHT EMPTY (Packed) / FULL (kg)	108 / 227
MAX. WATER TANK OPERATING PRESSURE (bar)	10
MAXIMUM PRESSURE CLOSED CIRCUIT (bar)	3.5

WATER STORAGE TANK	120lt
DIMENSIONS (mm)	560x1095
WEIGHT EMPTY (kg)	49
JACKET CAPACITY (lt)	8.6
JACKET SURFACE (m²)	0.6
MAX. TEST PRESSURE (bar)	15
MAX. OPERATING PRESSURE (bar)	10

COLLECTOR	APOLLON AL 2000
TOTAL AREA (m²)	2.03
NUMBER OF MANIFOLDS	10
HEAT TRANSFER MEDIUM	PROPYLENE GLYCOL SOLUTION
CAPACITY (lt)	1.75
ABSORBER SURFACE (m²)	1.8
TOTAL DIMENSIONS (mm)	2010x1010x110
COLLECTOR TOTAL WEIGHT (without liquid) (kg)	38
ABSORBER	SUN - SELECTIVE ALUMINIUM
ABSORBENCY / RADIATION COEFFICIENT	95% +/-2% / 5% +/-2%

Note: *All dimensions measured in mm*

SOLAR WATER HEATER 160lt/2m²

160lt/2m²
FLAT SURFACE

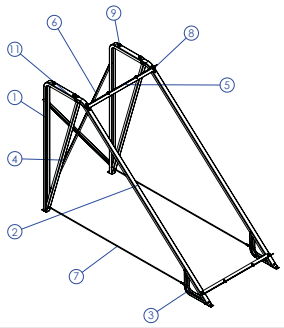

ITEM	PART NAME	DIMENSIONS	QTY.
1	Beam Π	100x2x1800mm	2
2	Beam Π	90x2x2550mm	2
3	Beam Π	80x2x500mm	2
4	Beam Π	80x2x1465mm	2
5	Collector Support	870mm	2
6	Beam (Lam. section 33x2mm)	1400mm	2
7	Screw Rod	M8x1770mm	2
8	Hexagon Head Bolt M8	M8x20	13
9	Hexagon Head Bolt M8	M8x25	4
10	Hex Nut M8		25
11	Hexagon Head Bolt M6	M6x50	6
12	Hex Nut M6		6
13	Washer	Ø8	12
14	Washer	Ø10	4
15	Screw 8x60		4
16	Upat D10		4

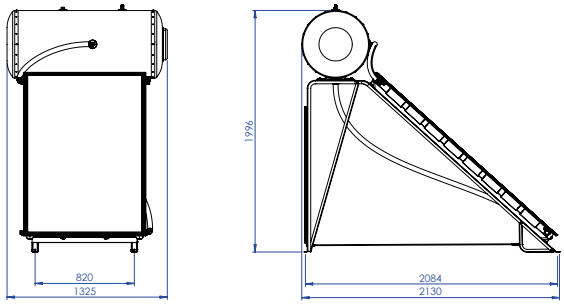

160lt/2m²
INCLINED SURFACE

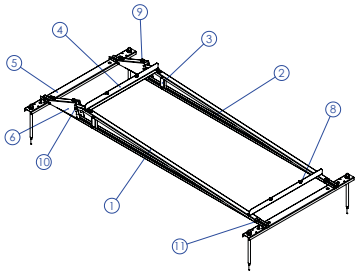

ITEM	PART NAME	DIMENSIONS	QTY.
1	Beam Π	90x2x2500mm	2
2	Beam Π	80x2x2690mm	2
3	Beam Π	90x2x135mm	2
4	Collector Support	870mm	2
5	Beam Π	125x1252mm	2
6	Angle Adjuster		2
7	Screw Rod	M20xØ9	4
8	Hexagon Head Bolt M8	M8x20	20
9	Hexagon Head Bolt M8	M8x25	4
10	Hexagon Head Bolt M8	M8x60	4
11	Hexagon Head Bolt M6	M6x50	2
12	Hex Nut M20		8
13	Hex Nut M8		26
14	Hex Nut M6		2
15	Washer	Ø20	8
16	Washer	Ø10	4
17	Washer	Ø8	12
18	Rivet with Thread	M8 FAR	2

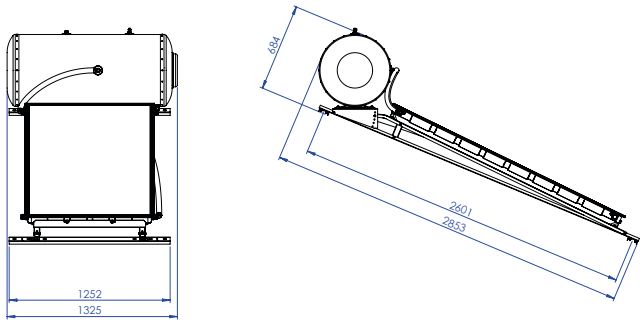

TOTAL SYSTEM	160lt/2m²
NUMBER OF COLLECTORS	1
SYSTEM WEIGHT EMPTY (Packed) / FULL (kg)	122 / 278
MAX. WATER TANK OPERATING PRESSURE (bar)	10
MAXIMUM PRESSURE CLOSED CIRCUIT (bar)	3.5

WATER STORAGE TANK	160lt
DIMENSIONS (mm)	560x1325
WEIGHT EMPTY (kg)	60
JACKET CAPACITY (lt)	12.9
JACKET SURFACE (m²)	0.9
MAX. TEST PRESSURE (bar)	15
MAX. OPERATING PRESSURE (bar)	10

COLLECTOR	APOLLON AL 2000
TOTAL AREA (m²)	2.03
NUMBER OF MANIFOLDS	10
HEAT TRANSFER MEDIUM	PROPYLENE GLYCOL SOLUTION
CAPACITY (lt)	1.75
ABSORBER SURFACE (m²)	1.8
TOTAL DIMENSIONS (mm)	2010x1010x110
COLLECTOR TOTAL WEIGHT (without liquid) (kg)	38
ABSORBER	SUN - SELECTIVE ALUMINIUM
ABSORBENCY / RADIATION COEFFICIENT	95% +/-2% / 5% +/-2%

Note: *All dimensions measured in mm*

SOLAR WATER HEATER 160lt/2.6m²

160lt/2.6m²
FLAT SURFACE

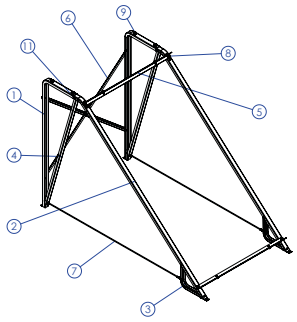

ITEM	PART NAME	DIMENSIONS	QTY.
1	Beam Π	100x2x1800mm	2
2	Beam Π	90x2x2550mm	2
3	Beam Π	80x2x500mm	2
4	Beam Π	80x2x1465mm	2
5	Collector Support	1100mm	2
6	Beam (Lam. section 33x2mm)	1400mm	2
7	Screw Rod	M8x1770mm	2
8	Hexagon Head Bolt M8	M8x20	13
9	Hexagon Head Bolt M8	M8x25	4
10	Hex Nut M8		25
11	Hexagon Head Bolt M6	M6x50	6
12	Hex Nut M6		6
13	Washer	Ø8	12
14	Washer	Ø10	4
15	Screw 8x60		4
16	Upat D10		4

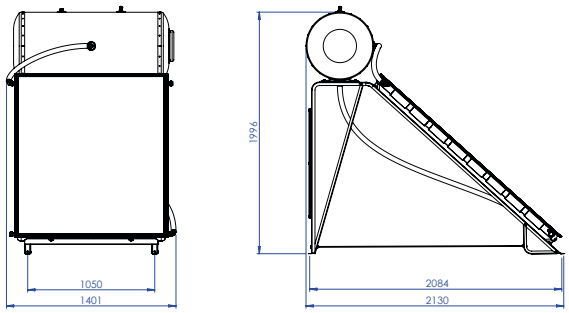

160lt/2.6m²
INCLINED SURFACE

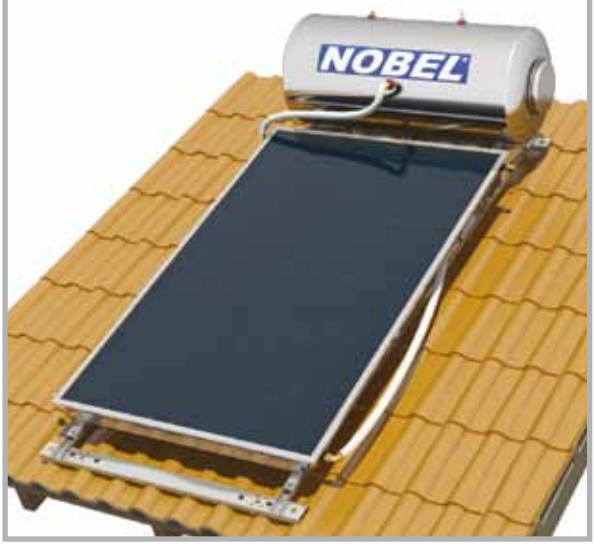

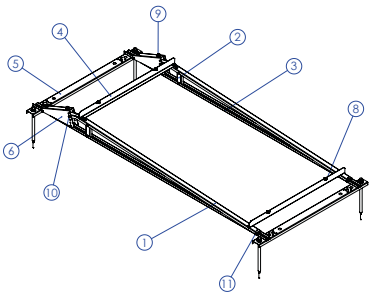

ITEM	PART NAME	DIMENSIONS	QTY.
1	Beam Π	90x2x2500mm	2
2	Beam Π	90x2x135mm	2
3	Beam Π	80x2x2690mm	2
4	Collector Support	1100mm	2
5	Beam Π	125x1252mm	2
6	Angle Adjuster		2
7	Screw Rod	M20xØ9	4
8	Hexagon Head Bolt M8	M8x20	20
9	Hexagon Head Bolt M8	M8x25	4
10	Hexagon Head Bolt M8	M8x60	4
11	Hexagon Head Bolt M6	M6x50	2
12	Hex Nut M20		8
13	Hex Nut M8		26
14	Hex Nut M6		2
15	Washer	Ø20	8
16	Washer	Ø10	4
17	Washer	Ø8	12
18	Rivet with Thread	M8 FAR	2

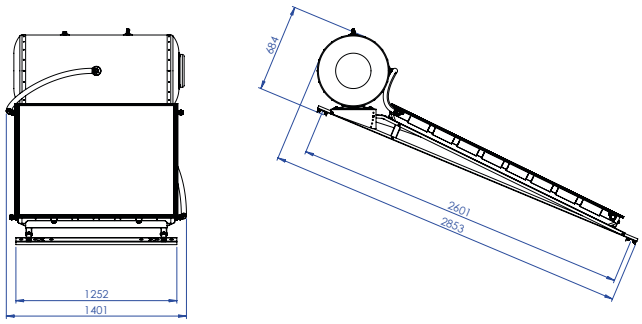

TOTAL SYSTEM	160lt/2.6m²
NUMBER OF COLLECTORS	1
SYSTEM WEIGHT EMPTY (Packed) / FULL (kg)	132 / 288
MAX. WATER TANK OPERATING PRESSURE (bar)	10
MAXIMUM PRESSURE CLOSED CIRCUIT (bar)	3.5

WATER STORAGE TANK	160lt
DIMENSIONS (mm)	560x1325
WEIGHT EMPTY (kg)	60
JACKET CAPACITY (lt)	12.9
JACKET SURFACE (m²)	0.9
MAX. TEST PRESSURE (bar)	15
MAX. OPERATING PRESSURE (bar)	10

COLLECTOR	APOLLON AL 2600
TOTAL AREA (m²)	2.53
NUMBER OF MANIFOLDS	13
HEAT TRANSFER MEDIUM	PROPYLENE GLYCOL SOLUTION
CAPACITY (lt)	2.12
ABSORBER SURFACE (m²)	2.3
TOTAL DIMENSIONS (mm)	2010x1260x110
COLLECTOR TOTAL WEIGHT (without liquid) (kg)	45.4
ABSORBER	SUN - SELECTIVE ALUMINIUM
ABSORBENCY / RADIATION COEFFICIENT	95% +/-2% / 5% +/-2%

Note: *All dimensions measured in mm*

SOLAR WATER HEATER 160lt/3m²

160lt/3m²
FLAT SURFACE

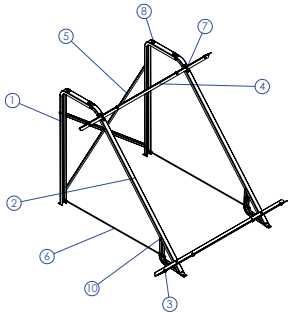

ITEM	PART NAME	DIMENSIONS	QTY.
1	Beam Π	100x2x1600mm	2
2	Beam Π	90x2x2050mm	2
3	Beam Π	80x2x500mm	2
4	Collector Support	1600mm	2
5	Beam (Lam. section 33x2mm)	1400mm	2
6	Screw Rod	M8x1290mm	2
7	Hexagon Head Bolt M8	M8x20	17
8	Hexagon Head Bolt M8	M8x25	4
9	Hex Nut M8		25
10	Hexagon Head Bolt M6	M6x50	4
11	Hex Nut M6		4
12	Washer	Ø8	16
13	Washer	Ø10	4
14	Screw 8x60		4
15	Upat D10		4

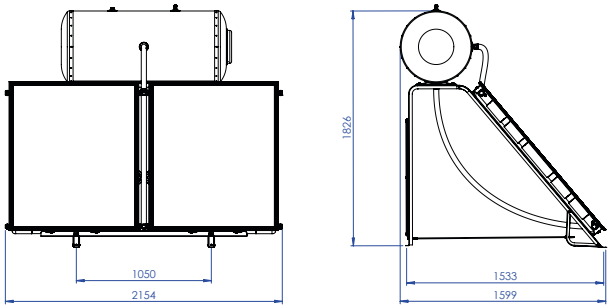

160lt/3m²
INCLINED SURFACE

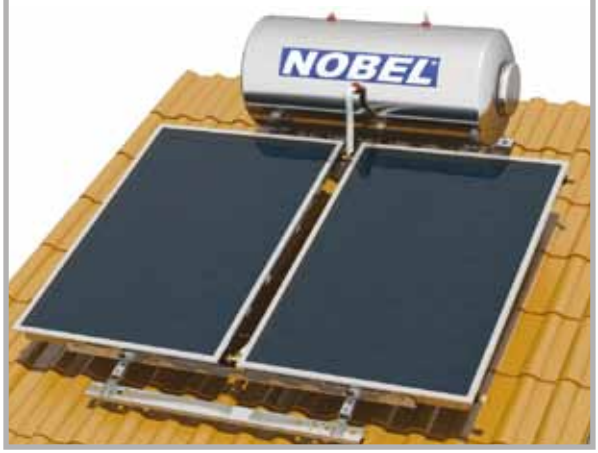

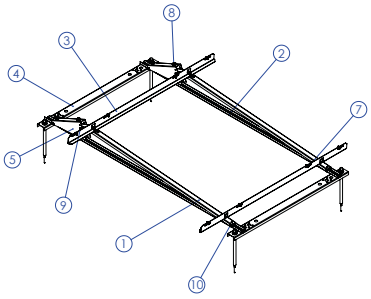

ITEM	PART NAME	DIMENSIONS	QTY.
1	Beam Π	90x2x2000mm	2
2	Beam Π	80x2x2170mm	2
3	Collector Support	1600mm	2
4	Beam Π	125x1252mm	2
5	Angle Adjuster		2
6	Screw Rod	M20xØ9	4
7	Hexagon Head Bolt M8	M8X20	20
8	Hexagon Head Bolt M8	M8x25	4
9	Hexagon Head Bolt M8	M8x60	4
10	Hexagon Head Bolt M6	M6x50	2
11	Hex Nut M20		8
12	Hex Nut M8		22
13	Hex Nut M6		2
14	Washer	Ø20	8
15	Washer	Ø10	4
16	Washer	Ø8	16
17	Rivet with Thread	M8 FAR	2

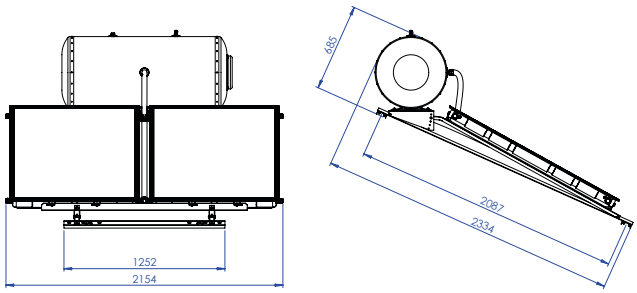

TOTAL SYSTEM	160lt/3m²
NUMBER OF COLLECTORS	2
SYSTEM WEIGHT EMPTY (Packed) / FULL (kg)	138 / 293
MAX. WATER TANK OPERATING PRESSURE (bar)	10
MAXIMUM PRESSURE CLOSED CIRCUIT (bar)	3.5

WATER STORAGE TANK	160lt
DIMENSIONS (mm)	560x1325
WEIGHT EMPTY (kg)	60
JACKET CAPACITY (lt)	12.9
JACKET SURFACE (m²)	0.9
MAX. TEST PRESSURE (bar)	15
MAX. OPERATING PRESSURE (bar)	10

COLLECTOR	APOLLON AL 1500
TOTAL AREA (m²)	1.52
NUMBER OF MANIFOLDS	10
HEAT TRANSFER MEDIUM	PROPYLENE GLYCOL SOLUTION
CAPACITY (lt)	1.45
ABSORBER SURFACE (m²)	1.3
TOTAL DIMENSIONS (mm)	1510x1010x110
COLLECTOR TOTAL WEIGHT (without liquid) (kg)	28
ABSORBER	SUN - SELECTIVE ALUMINIUM
ABSORBENCY / RADIATION COEFFICIENT	95% +/-2% / 5% +/-2%

SOLAR WATER HEATER 200lt/2.6m²

200lt/2.6m²
FLAT SURFACE

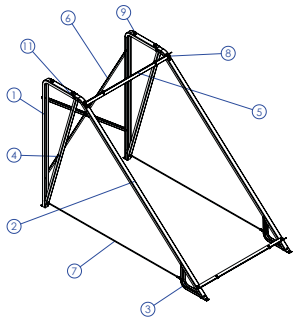

ITEM	PART NAME	DIMENSIONS	QTY.
1	Beam Π	100x2x1800mm	2
2	Beam Π	90x2x2550mm	2
3	Beam Π	80x2x500mm	2
4	Beam Π	80x2x1465mm	2
5	Collector Support	1100mm	2
6	Beam (Lam. section 33x2mm)	1400mm	2
7	Screw Rod	M8x1770mm	2
8	Hexagon Head Bolt M8	M8x20	13
9	Hexagon Head Bolt M8	M8x25	4
10	Hex Nut M8		25
11	Hexagon Head Bolt M6	M6x50	6
12	Hex Nut M6		6
13	Washer	Ø8	12
14	Washer	Ø10	4
15	Screw 8x60		4
16	Upat D10		4

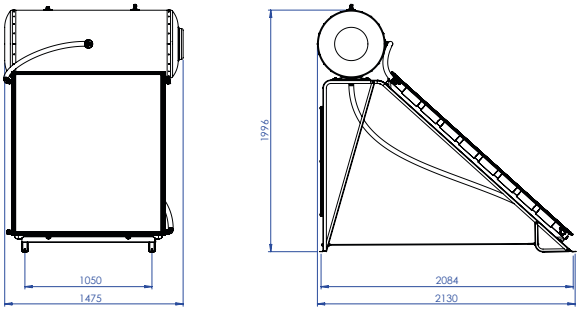

200lt/2.6m²
INCLINED SURFACE

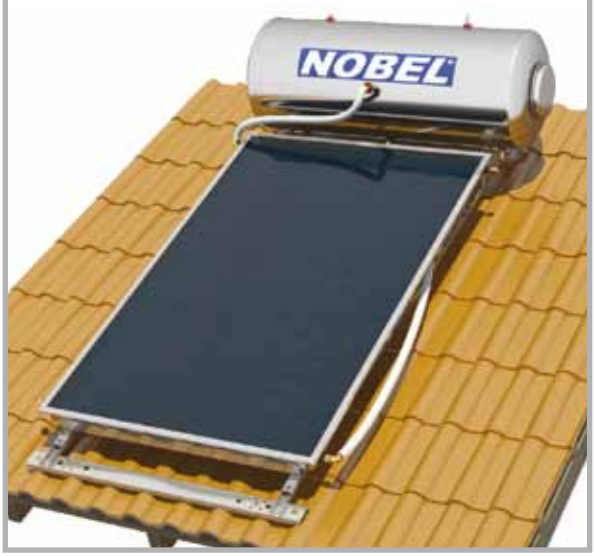

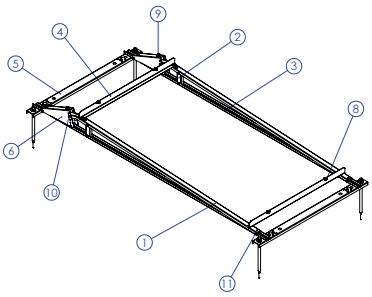

ITEM	PART NAME	DIMENSIONS	QTY.
1	Beam Π	90x2x2500mm	2
2	Beam Π	90x2x135mm	2
3	Beam Π	80x2x2690mm	2
4	Collector Support	1100mm	2
5	Beam Π	125x1252mm	2
6	Angle Adjuster		2
7	Screw Rod	M20xØ9	4
8	Hexagon Head Bolt M8	M8x20	20
9	Hexagon Head Bolt M8	M8x25	4
10	Hexagon Head Bolt M8	M8x60	4
11	Hexagon Head Bolt M6	M6x50	2
12	Hex Nut M20		8
13	Hex Nut M8		26
14	Hex Nut M6		2
15	Washer	Ø20	8
16	Washer	Ø10	4
17	Washer	Ø8	12
18	Rivet with Thread	M8 FAR	2

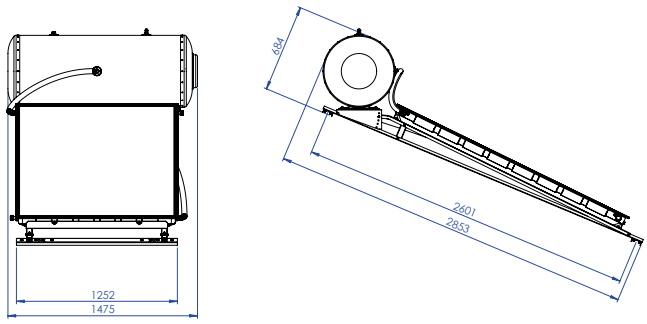

TOTAL SYSTEM	200lt/2.6m²
NUMBER OF COLLECTORS	1
SYSTEM WEIGHT EMPTY (Packed) / FULL (kg)	145 / 346
MAX. WATER TANK OPERATING PRESSURE (bar)	10
MAXIMUM PRESSURE CLOSED CIRCUIT (bar)	3.5

WATER STORAGE TANK	200lt
DIMENSIONS (mm)	560x1475
WEIGHT EMPTY (kg)	72
JACKET CAPACITY (lt)	18.3
JACKET SURFACE (m²)	1.3
MAX. TEST PRESSURE (bar)	15
MAX. OPERATING PRESSURE (bar)	10

COLLECTOR	APOLLON AL 2600
TOTAL AREA (m²)	2.53
NUMBER OF MANIFOLDS	13
HEAT TRANSFER MEDIUM	PROPYLENE GLYCOL SOLUTION
CAPACITY (lt)	2.12
ABSORBER SURFACE (m²)	2.3
TOTAL DIMENSIONS (mm)	2010x1260x110
COLLECTOR TOTAL WEIGHT (without liquid) (kg)	45.4
ABSORBER	SUN - SELECTIVE ALUMINIUM
ABSORBENCY / RADIATION COEFFICIENT	95% +/-2% / 5% +/-2%

Note: *All dimensions measured in mm*

SOLAR WATER HEATER 200lt/3m²

200lt/3m²
FLAT SURFACE

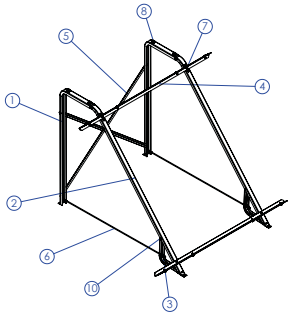

ITEM	PART NAME	DIMENSIONS	QTY.
1	Beam Π	100x2x1600mm	2
2	Beam Π	90x2x2050mm	2
3	Beam Π	80x2x500mm	2
4	Collector Support	1600mm	2
5	Beam (Lam. section 33x2mm)	1400mm	2
6	Screw Rod	M8x1290mm	2
7	Hexagon Head Bolt M8	M8x20	17
8	Hexagon Head Bolt M8	M8x25	4
9	Hex Nut M8		25
10	Hexagon Head Bolt M6	M6x50	4
11	Hex Nut M6		4
12	Washer	Ø8	16
13	Washer	Ø10	4
14	Screw 8x60		4
15	Upat D10		4

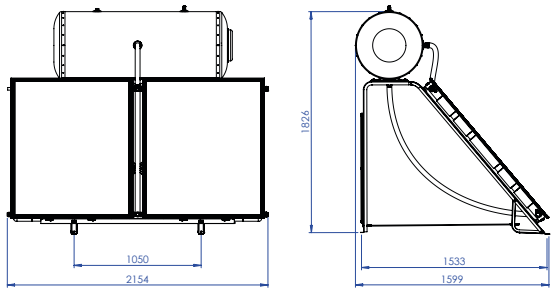

200lt/3m²
INCLINED SURFACE

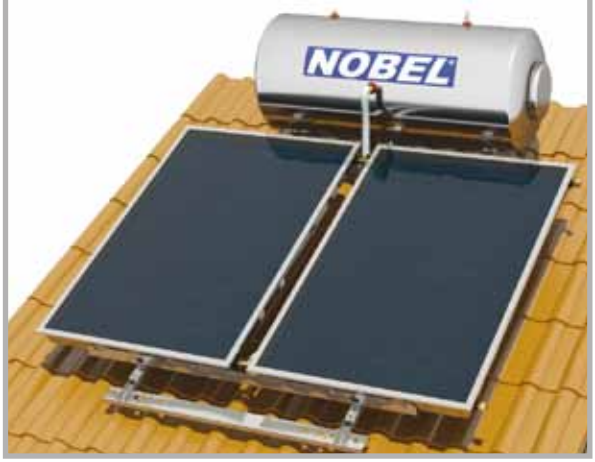

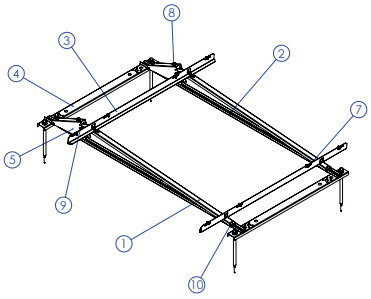

ITEM	PART NAME	DIMENSIONS	QTY.
1	Beam Π	90x2x2000mm	2
2	Beam Π	80x2x2170mm	2
3	Collector Support	1600mm	2
4	Beam Π	125x1252mm	2
5	Angle Adjuster		2
6	Screw Rod	M20xØ9	4
7	Hexagon Head Bolt M8	M8X20	20
8	Hexagon Head Bolt M8	M8x25	4
9	Hexagon Head Bolt M8	M8x60	4
10	Hexagon Head Bolt M6	M6x50	2
11	Hex Nut M20		8
12	Hex Nut M8		22
13	Hex Nut M6		2
14	Washer	Ø20	8
15	Washer	Ø10	4
16	Washer	Ø8	16
17	Rivet with Thread	M8 FAR	2

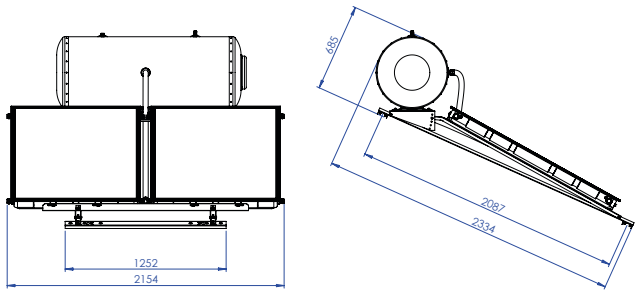

TOTAL SYSTEM	200lt/3m²
NUMBER OF COLLECTORS	2
SYSTEM WEIGHT EMPTY (Packed) / FULL (kg)	151 / 352
MAX. WATER TANK OPERATING PRESSURE (bar)	10
MAXIMUM PRESSURE CLOSED CIRCUIT (bar)	3.5

WATER STORAGE TANK	200lt
DIMENSIONS (mm)	560x1475
WEIGHT EMPTY (kg)	72
JACKET CAPACITY (lt)	18.3
JACKET SURFACE (m²)	1.3
MAX. TEST PRESSURE (bar)	15
MAX. OPERATING PRESSURE (bar)	10

COLLECTOR	APOLLON AL 1500
TOTAL AREA (m²)	1.52
NUMBER OF MANIFOLDS	10
HEAT TRANSFER MEDIUM	PROPYLENE GLYCOL SOLUTION
CAPACITY (lt)	1.45
ABSORBER SURFACE (m²)	1.3
TOTAL DIMENSIONS (mm)	1510x1010x110
COLLECTOR TOTAL WEIGHT (without liquid) (kg)	28
ABSORBER	SUN - SELECTIVE ALUMINIUM
ABSORBENCY / RADIATION COEFFICIENT	95% +/-2% / 5% +/-2%

Note: *All dimensions measured in mm*

SOLAR WATER HEATER 200lt/4m²

200lt/4m²
FLAT SURFACE

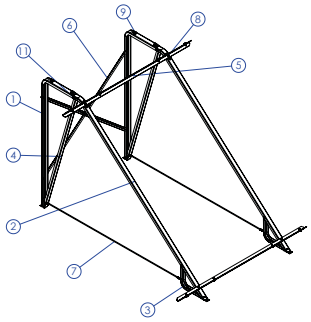

ITEM	PART NAME	DIMENSIONS	QTY.
1	Beam Π	100x2x1800mm	2
2	Beam Π	90x2x2550mm	2
3	Beam Π	80x2x500mm	2
4	Beam Π	80x2x1465mm	2
5	Collector Support	1600mm	2
6	Beam (Lam. section 33x2mm)	1400mm	2
7	Screw Rod	M8x1770mm	2
8	Hexagon Head Bolt M8	M8x20	17
9	Hexagon Head Bolt M8	M8x25	4
10	Hex Nut M8		25
11	Hexagon Head Bolt M6	M6x50	6
12	Hex Nut M6		6
13	Washer	Ø8	16
14	Washer	Ø10	4
15	Screw 8x60		4
16	Upat D10		4

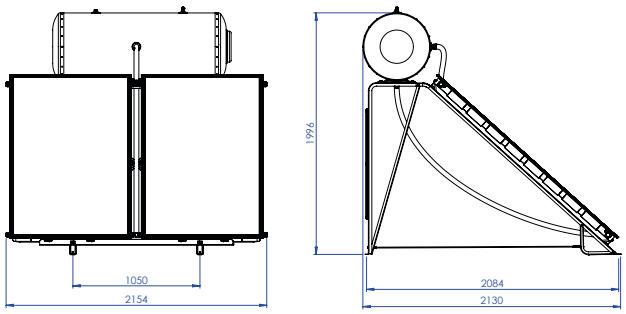

200lt/4m²
INCLINED SURFACE

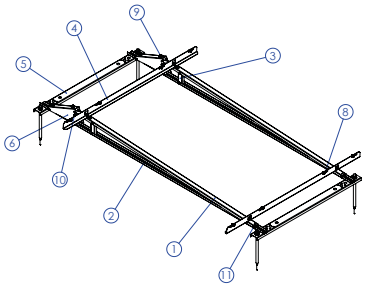

ITEM	PART NAME	DIMENSIONS	QTY.
1	Beam Π	90x2x2500mm	2
2	Beam Π	80x2x2690mm	2
3	Beam Π	90x2x135mm	2
4	Collector Support	1600mm	2
5	Beam Π	125x1252mm	2
6	Angle Adjuster		2
7	Screw Rod	M20xØ9	4
8	Hexagon Head Bolt M8	M8X20	24
9	Hexagon Head Bolt M8	M8x25	4
10	Hexagon Head Bolt M8	M8x60	4
11	Hexagon Head Bolt M6	M6x50	2
12	Hex Nut M20		8
13	Hex Nut M8		26
14	Hex Nut M6		2
15	Washer	Ø20	8
16	Washer	Ø10	4
17	Washer	Ø8	16
18	Rivet with Thread	M8 FAR	2

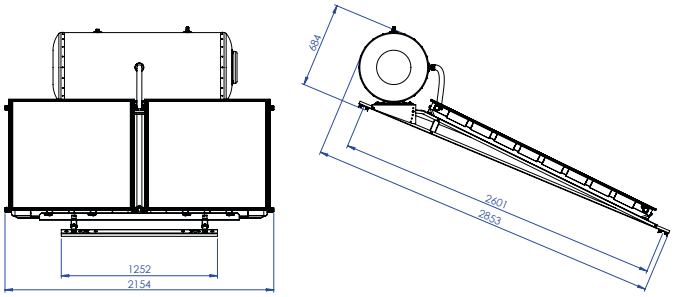

TOTAL SYSTEM	200lt/4m²
NUMBER OF COLLECTORS	2
SYSTEM WEIGHT EMPTY (Packed) / FULL (kg)	174 / 374
MAX. WATER TANK OPERATING PRESSURE (bar)	10
MAXIMUM PRESSURE CLOSED CIRCUIT (bar)	3.5

WATER STORAGE TANK	200lt
DIMENSIONS (mm)	560x1475
WEIGHT EMPTY (kg)	72
JACKET CAPACITY (lt)	18.3
JACKET SURFACE (m²)	1.3
MAX. TEST PRESSURE (bar)	15
MAX. OPERATING PRESSURE (bar)	10

COLLECTOR	APOLLON AL 2000
TOTAL AREA (m²)	2.03
NUMBER OF MANIFOLDS	10
HEAT TRANSFER MEDIUM	PROPYLENE GLYCOL SOLUTION
CAPACITY (lt)	1.75
ABSORBER SURFACE (m²)	1.8
TOTAL DIMENSIONS (mm)	2010x1010x110
COLLECTOR TOTAL WEIGHT (without liquid) (kg)	38
ABSORBER	SUN - SELECTIVE ALUMINIUM
ABSORBENCY / RADIATION COEFFICIENT	95% +/-2% / 5% +/-2%

Note: *All dimensions measured in mm*

SOLAR WATER HEATER 320lt/4m²

320lt/4m²
FLAT SURFACE

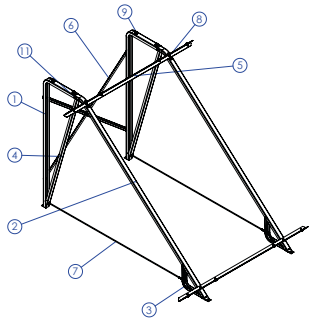

ITEM	PART NAME	DIMENSIONS	QTY.
1	Beam Π	100x2x1800mm	2
2	Beam Π	90x2x2550mm	2
3	Beam Π	80x2x500mm	2
4	Beam Π	80x2x1465mm	2
5	Collector Support	1600mm	2
6	Beam (Lam. section 33x2mm)	1400mm	2
7	Screw Rod	M8x1770mm	2
8	Hexagon Head Bolt M8	M8x20	17
9	Hexagon Head Bolt M8	M8x25	4
10	Hex Nut M8		25
11	Hexagon Head Bolt M6	M6x50	6
12	Hex Nut M6		6
13	Washer	Ø8	16
14	Washer	Ø10	4
15	Screw 8x60		4
16	Upat D10		4

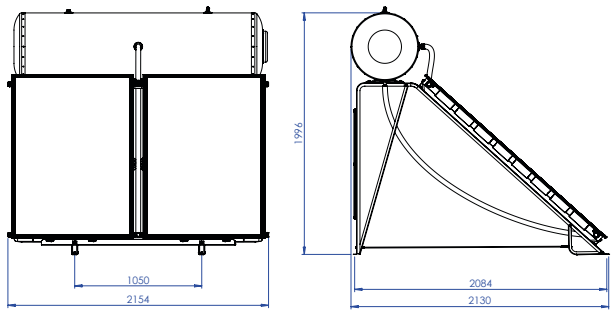

320lt/4m²
INCLINED SURFACE

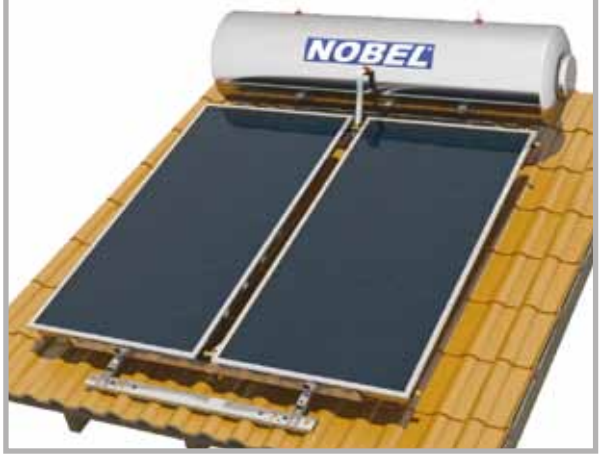

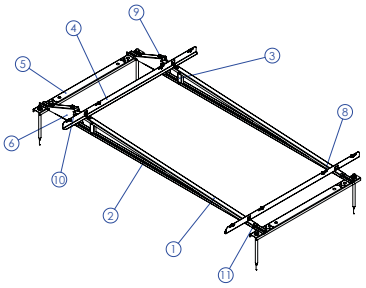

ITEM	PART NAME	DIMENSIONS	QTY.
1	Beam Π	90x2x2500mm	2
2	Beam Π	80x2x2690mm	2
3	Beam Π	90x2x135mm	2
4	Collector Support	1600mm	2
5	Beam Π	125x1252mm	2
6	Angle Adjuster		2
7	Screw Rod	M20xØ9	4
8	Hexagon Head Bolt M8	M8X20	24
9	Hexagon Head Bolt M8	M8x25	4
10	Hexagon Head Bolt M8	M8x60	4
11	Hexagon Head Bolt M6	M6x50	2
12	Hex Nut M20		8
13	Hex Nut M8		26
14	Hex Nut M6		2
15	Washer	Ø20	8
16	Washer	Ø10	4
17	Washer	Ø8	16
18	Rivet with Thread	M8 FAR	2

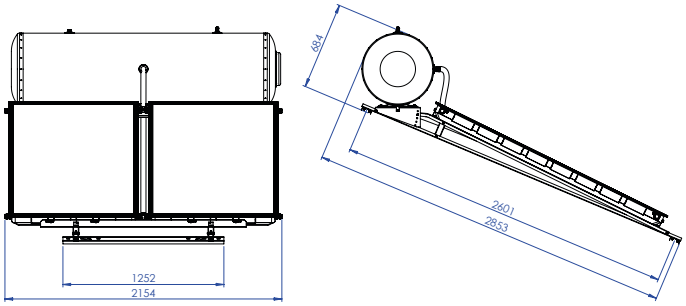

TOTAL SYSTEM	320lt/4m²
NUMBER OF COLLECTORS	2
SYSTEM WEIGHT EMPTY (Packed) / FULL (kg)	205 / 534
MAX. WATER TANK OPERATING PRESSURE (bar)	10
MAXIMUM PRESSURE CLOSED CIRCUIT (bar)	3.5

WATER STORAGE TANK	320lt
DIMENSIONS (mm)	560x2095
WEIGHT EMPTY (kg)	104
JACKET CAPACITY (lt)	25.8
JACKET SURFACE (m²)	1.8
MAX. TEST PRESSURE (bar)	15
MAX. OPERATING PRESSURE (bar)	10

COLLECTOR	APOLLON AL 2000
TOTAL AREA (m²)	2.03
NUMBER OF MANIFOLDS	10
HEAT TRANSFER MEDIUM	PROPYLENE GLYCOL SOLUTION
CAPACITY (lt)	1.75
ABSORBER SURFACE (m²)	1.8
TOTAL DIMENSIONS (mm)	2010x1010x110
COLLECTOR TOTAL WEIGHT (without liquid) (kg)	38
ABSORBER	SUN - SELECTIVE ALUMINIUM
ABSORBENCY / RADIATION COEFFICIENT	95% +/-2% / 5% +/-2%

Note: *All dimensions measured in mm*

GENERAL INSTALLATION RULES

ATTENTION: **Installation** must be in compliance with local & national rules concerning water and electrical installations (plumbing, electricity, hygiene, urban and others).

The solar system's packaging must be removed at the site of installation in order to protect the device from shocks during its transportation, making sure that the collectors are not supported on their pipe joints. Until installation is completed, the collector's glass must remain covered until the water storage tank is filled with domestic water, so as to avoid the boiling of the filling liquid or the breaking of the glass. The plastic protective caps must be removed from the water storage tank's and the collectors' pipe joints.

Installation location - shading: Prior to installation, a proper selection of the location must be made by the installer (in agreement with the customer), and the surface must be checked (taking into consideration its static resistance), so that it can bear the weight of the system.
On inclined roofs the system should not be placed between two beams but above a single one.
The position chosen for the solar water heater installation should not be shaded by any obstacles such as trees, buildings and other all year round, so as to ensure at least 4 hours of uninhibited exposure of the collector to the sun during the midday hours.

LATITUDE	DISTANCE BETWEEN THE OBSTACLE AND THE COLLECTOR (L)
0° - 25°	1.0 x H
26° - 35°	1.5 x H
36° - 45°	2.0 x H
46° - 50°	2.5 x H
> 50°	3.0 x H

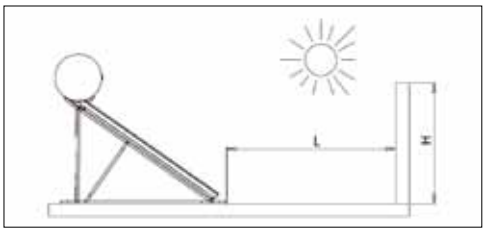

Orientation - optimum angle: a basic factor for the system's optimum performance is the selection of its angle and orientation for its particular location and the time during which the maximum gain is required.
The solar system should be positioned so that the collector's surface faces the geographical south, if the installation takes place in the Northern Hemisphere (and the geographical north for the Southern Hemisphere), i.e. it should always face the Equator.

Any deviation means a reduction in the system's performance. If a deviation from the proper orientation cannot be avoided, then the system's performance should be corrected by increasing the collector surface, following a study and evaluation of the specific conditions that apply. As the sun ray's angle of attack varies with time but also depending on the system's location, the collector's angle should be approximately equal to the installation location's latitude. At this angle the maximum energy gain on an annual basis is achieved.

Installation particularities: In case there is no compatibility between the surface where the solar water heater will be installed (inclined or flat) and the standard equipment provided with the system, a different kind of equipment should be used. The responsibility for the equipment chosen lies on the installer and in no case on the company. It is up to the installer to propose & install the different equipment required, who must previously agree it with the customer.

Special weather conditions: In regions suffering from heavy snowfalls, please make sure that the snow is always timely removed. For this case and cases of regions with storms, high wind velocity, rainfall, cyclones, tornadoes, the system must be placed on the roof as firmly as possible and must be tightened with extra metal stripes. In areas where these conditions occur and hail of more than 20mm in diameter is to be observed, it is recommended that insurance for the solar water heater is issued. In every case, it is recommended to secure your solar water heater on the support base system with more metal belts than those provided.

Piping: the routing of the piping and cabling must be agreed upon between the installer and the client, so as to ensure the proper installation of the solar system in compliance with local rules concerning water and electrical installations. Make sure that the tubes connecting the storage tank with the collector and the piping to/from the water heater are insulated in such a way that they can withstand temperatures covering the range of: -30°C to 120°C. Anti-UV protection must be used for the insulation.

Antifreeze Liquid: The special heat transfer medium used in the closed circuit protects the system from freezing and from salt accumulation inside the collector tubes. The jacket in which the heat transfer medium's circulation takes place, does not communicate with the water tank. The thermal fluid must be well mixed with water in a percentage that is necessary to protect the system. The responsibility for the appropriate heat transfer medium quantity as well as for the use of other liquid than the one accompanying the solar water heater lies on the installer and in no case on the company.
The use of water or inappropriate liquid may annul the warranty validity.
After the installation is completed, the area where the work was executed should be clean & tidy. The warranty should be filled in and the customer should sign it and immediately mail it to the company. The customer should fill in the check list provided by the company. The company does not hold any responsibility that may be the result of an inappropriate installation or incorrect use of components used for the solar water heater installation.

INSTALLATION POSITION

The installation is only allowed on roofs and flat surfaces of adequate bearing capacity. Before you proceed with the installation, make sure that the roof and/or the construction is of adequate bearing capacity in terms of statics, always according to the expected maximum loads at the installation point.
If the installation is in a place with an extremely big wind and snow load, the system as a whole should be statically checked by a skilled person, e.g a specialized engineer. In special cases, strengthening or more solid constructions may be required.

APOLLON AL COLLECTOR		
INSTALLATION MODE	**WIND LOAD [km/h] / [kN/m²]**	**SNOW LOAD [kN/m²]**
Inclined surface Inclination angle: 15° – 75°	151 / 1.1	1.25
Flat surface Inclination angle: 35°	151 / 1.1	1.25

The system may only be installed in locations with lower wind and snow load values than the ones mentioned above.

Space requirements for installation on the roof

TILED ROOF

For the installation on the roof the following points must be taken care of:

- The minimum distances from the ends of the roof should be:
  - From the sides: distance equal to the width of two tiles
  - From the top of the roof: distance equal to three rows of tiles
- The minimum distance limit of 0.8m should necessarily be respected, in order for the collectors and the mounting accessories not to be exposed to winds the power of which increases on the perimetrical edges of the roof.

Space requirements for free standing installation

FLAT ROOF

The system should be installed at least 1.5m away from the edges of the roof so as for:

1. The systems to be accessible for maintenance reasons.
2. The systems and the fixing system not to be exposed to strong winds which are developed at the ends and edges of the roof.
3. The snow to be removed.

GENERAL PREVENTION MEASURES

- Please respect the instructions related to accidents prevention and the safety rules during the installation of the solar thermal systems as well as the piping.
- Please keep the work place clear and free of objects obstructing the execution of works.
- Do not let children, pets and other people to come in contact with the tools or close to the working place. This has to be respected, especially in case of existing buildings renovation.
- Store the antifreeze liquid in a safe place away from children.
- During the execution of maintenance, service or installation modification works, please remove the electrical devices and tools current collector or protect the electrical devices and electrical tools against unintended activation.
- Use only the tools intended to be used for this specific solar system. The use of other components or inappropriate tools can cause accidents.

Requirements related to the personnel

- The installation of NOBEL Solar Thermal systems can only be undertaken by authorized specialized companies and trained personnel.
- Works in electrical installations or conductors have to be executed by trained & specialized electro technicians only.

Labour uniforms

- Have protection glasses on, as well as appropriate work uniform, protection shoes, protection helmet and special long hair net.
- Do not wear baggy clothes or jewelry, as they me be trapped in movable parts.
- If, despite the use of protection glasses, antifreeze liquid comes in contact with your eyes, wash off your eyes with plenty of water and with the eyes wide open.
- Please wear protection helmet during the installation works executed at the level of or above the head.

Installation of the water storage tank

- For the transportation, mounting & installation of the tank use forklifts suitable for the dimension and weight of the tank.
- Please protect the enameling surface from beatings during transportation and installation.
- Due to the tank's weight, there is a risk of accidents. Please make sure that the bearing capacity of the ground where the tank is going to be installed is adequate, when the tank is full.

LIGHTNING PROTECTION

The metal construction conforms to the general requirements of the ELOT 1197 Standard and the special lightning protection requirements of the ELOT 1412 Standard which takes into account the environmental conditions as well as the altitude.

SUPPORT BASE ASSEMBLY ON A FLAT SURFACE

SYSTEM WITH 1 COLLECTOR

1. Part **1** is screwed and tightened to part **2** using the M8x25 screws, the nuts and the washers contained in the packaging. Part **6** (if contained in the packaging) is joined to part **2** with the M8x50 screws.
The procedure is repeated for the other pair of **1** and **2** parts.

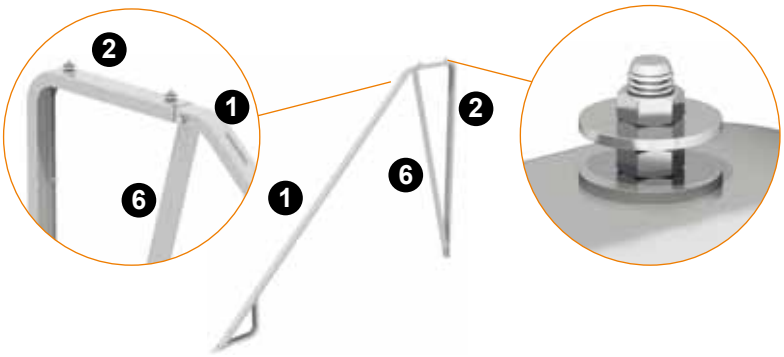

2. Screw rod **3** is screwed and tightened between **1** and **2**, after is has been passed through part **6** (if contained in the packaging) using double M8 nuts.
The procedure is repeated for the other pair of **1**, **2** and **6** parts.

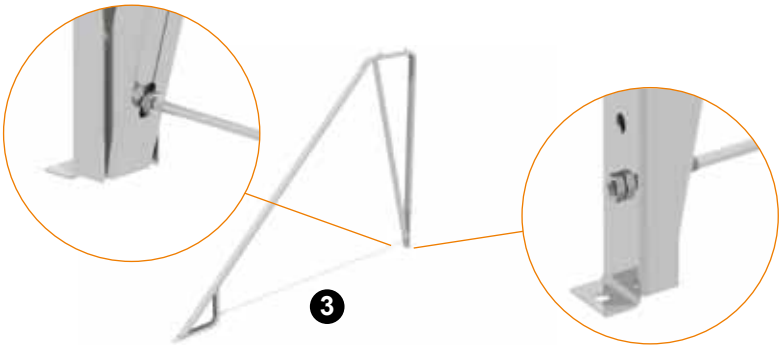

3. Parts **4** are placed crosswise, but not tightened.

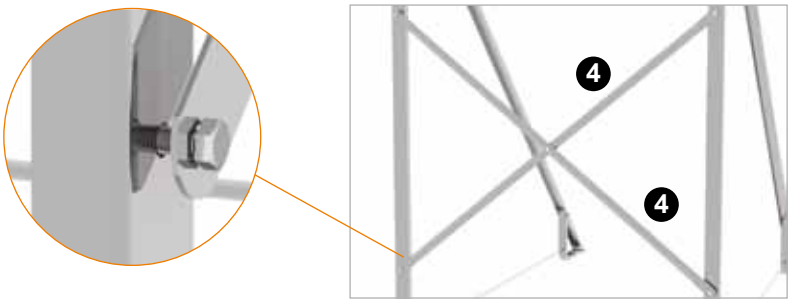

4. One part **5** is placed at the bottom and tightened with M8x20 screws.

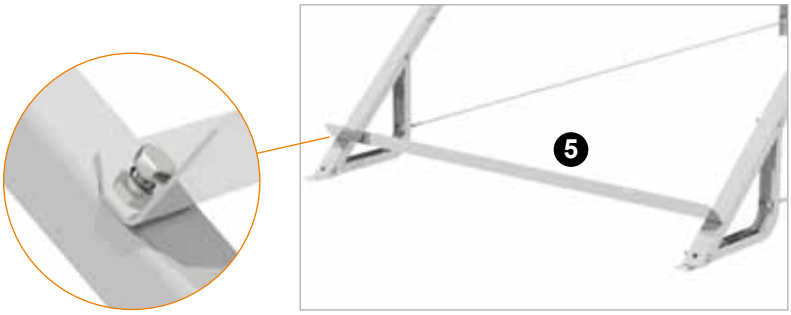

5. The second part **5** is placed at the top without tightening the M8x20 screws to the nuts.

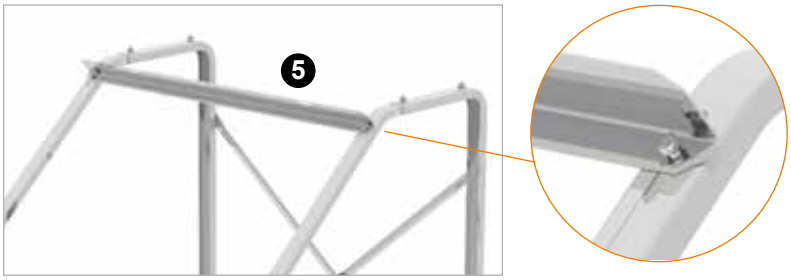

6. The collector is placed on the base with the arrows pointing up, on the lower part **5**, lifting the upper part **5**. The collector is screwed to the M8x20 screws without tightening.

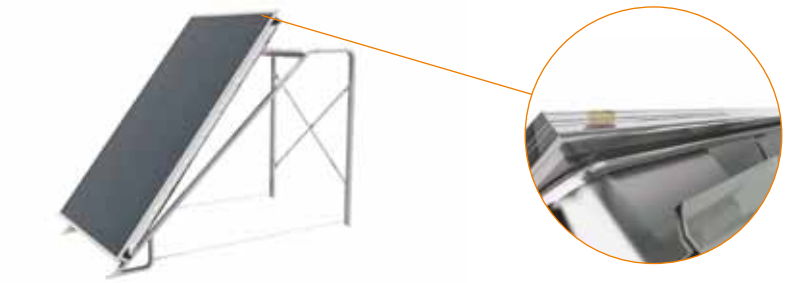

7. The water tank is placed on the base with the electrical components on the right when looking at the solar water tank from the front, and secured by tightening the M8 nuts to the M8x25 screws, with which we have joined **1** and **2** parts (STEP 1).

8. Make sure the appliance is level and not at an angle using a spirit level.

9. Center the collector and tighten the M8x20 screws to parts **5**, as well as all other screws on the base.

10. The DN16 INOX corner female union 3/4", screwed horizontally and to the left to the water tank at the point marked "JACKET INLET".
11. The Ø22 x DN16 INOX corner union, is screwed on to the collector's bottom right inlet with an upward direction and an angle equal to the collector's.
12. The second Ø22 x DN16 INOX corner union, is screwed on to the collector's top left outlet with an upward direction and according to the inclination angle of the collector.
13. The DN16 INOX female union 3/4", is placed at the point marked "JACKET OUTLET" on the water tank.
14. Using the DN16 INOX flexible connecting pipe the "JACKET OUTLET" (STEP 13) at the bottom of the water tank is joined to the bottom right inlet of the collector (STEP 11), after first having placed the relevant insulation on the plastic pipe.
15. The DN16 INOX flexible connecting pipe is then connected to the "JACKET INLET" (STEP 10) of the water tank and to the upper left outlet of the collector (STEP 12), after first placing the relevant insulation on the pipe.

    NOTE: *Make sure the length of the insulation is bigger that the pipe's so that when the fittings are tightened in, all the components will be covered.*
16. Now all the fittings can be tightened.
17. The whole system then has to be properly oriented (See paragraph "GENERAL INSTALLATION RULES").
18. The base is secured using four Upat D10 and bolts (M8x60).

SUPPORT BASE ASSEMBLY ON A FLAT SURFACE

SYSTEMS WITH 2 COLLECTORS

1. Part **1** is screwed and tightened to part **2** using the M8x25 screws, the nuts and the washers contained in the packaging. Part **6** is joined to part **2** with the M8x50 screws. (Parts **6** apply to the 200, 250 and 300 litre types and not to the 160 litre type). The procedure is repeated for the other pair of **1** and **2** parts.

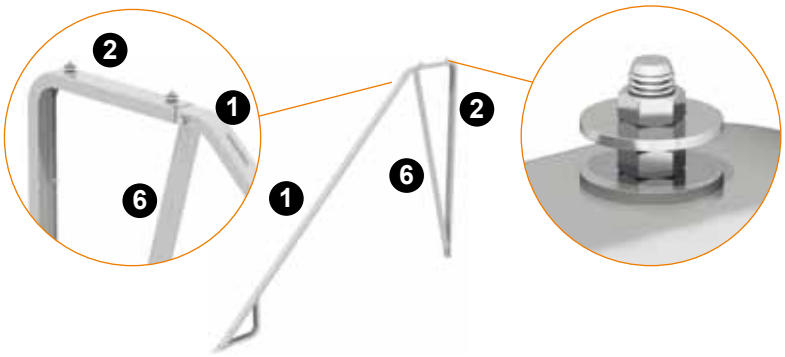

2. Screw rod **3** is screwed and tightened between **1** and **2**, after is has been passed through part **6** using double M8 nuts (parts **6** apply to the 200, 250 and 300 litre types and not to the 160 litre one). The procedure is repeated for the other pair of **1**, **2** and **6** parts.

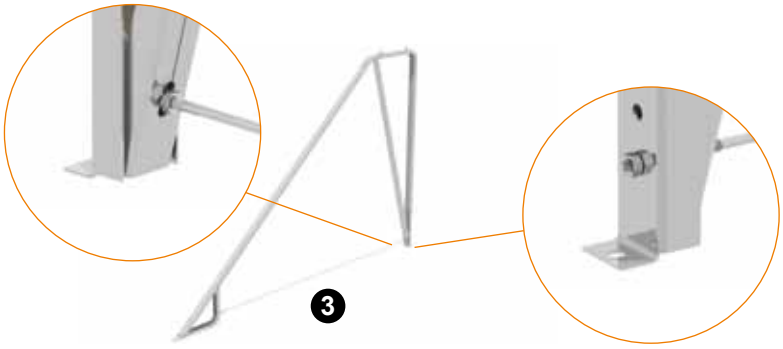

3. Parts **4** are placed crosswise, but not tightened.

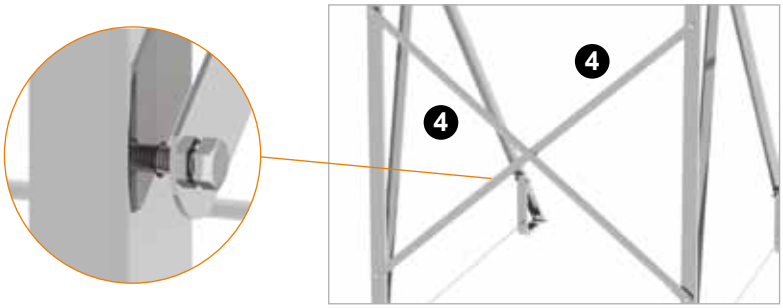

4. One part **5** is placed at the bottom and tightened with M8x20 screws.

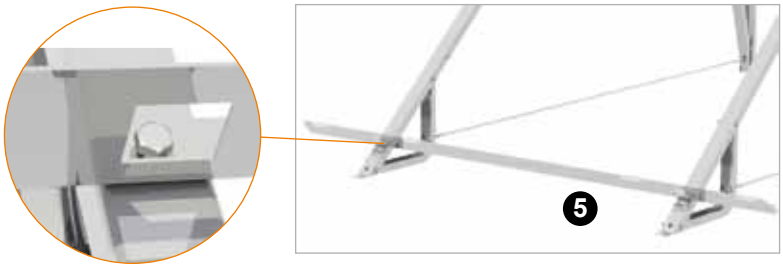

5. The second part **5** is placed at the top without tightening the M8x20 screws with the nuts.

6. In case of two collectors, first place the left one to the bottom part **5** lifting the upper one. Place the screws M8x20 with the support washers of the collector (4 for each collector) without tightening them. Place the T-pieces Ø22 x DN16 INOX x Ø22 unions at the edges of the collector.

7. Join the second collector without tightening the union.

8. The collectors are screwed with M8x20 screws and washers onto parts **5** without tightening.

9. The water tank is placed on the base with the electrical components on the right when looking at the solar water tank from the front, and secured by tightening the M8 nuts to the M8x25 screws, with which we have joined **1** and **2** parts (STEP 1).

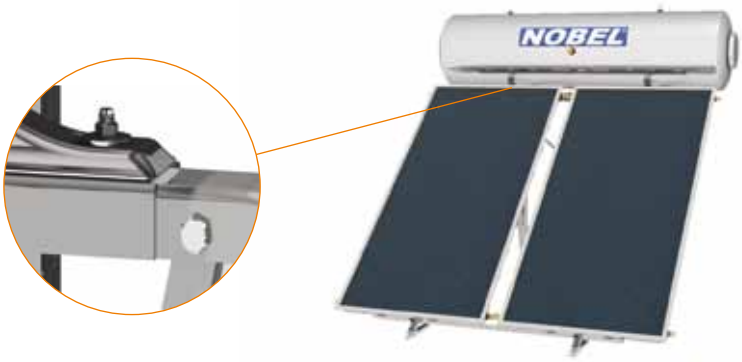

10. Center the collectors and tighten the M8x20 screws to parts **5**, as well as all other screws on the base.
11. Make sure the appliance is level and not at an angle using a spirit level.

12. The female unions 3/4" x DN16 INOX are placed on the water tank at the points marked "JACKET INLET" (STEP 12a) and "JACKET OUTLET" (STEP 12b).
13. Using the flexible connecting pipe DN16 INOX, the "JACKET OUTLET" (at the bottom of the water tank) is joined to the T-piece at bottom inlet of the collectors (STEP 13a), after first having placed the relevant insulation. The flexible connecting pipe DN16 INOX, is then connected to the "JACKET INLET" of the water tank and to the T-piece at the top outlet of the collectors (STEP 13b), after first placing the relevant insulation.

    NOTE: *Make sure the bottom T-piece is angled in the same way as the collectors, the top T-piece is vertical and the length of the insulation is greater than that of the respective pipes' so that when the fittings are tightened in, all the components will be covered.*
14. All the fittings and T-pieces are tightened.
15. The whole system then has to be properly oriented (See paragraph "GENERAL INSTALLATION RULES").
16. The base is secured using four Upat D10 and bolts (M8x60).

During the installation of the collector, make sure that the arrow points up.

SUPPORT BASE ASSEMBLY ON AN INCLINED SURFACE

ATTENTION! After the installation check that the collectors surface has a tilt angle to the horizontal position of geographical latitude ±5°.

SYSTEMS WITH 1 COLLECTOR

1. Parts **1** are screwed and tightened to parts **A** using the M8x20 screws, and the nuts contained in the packaging.

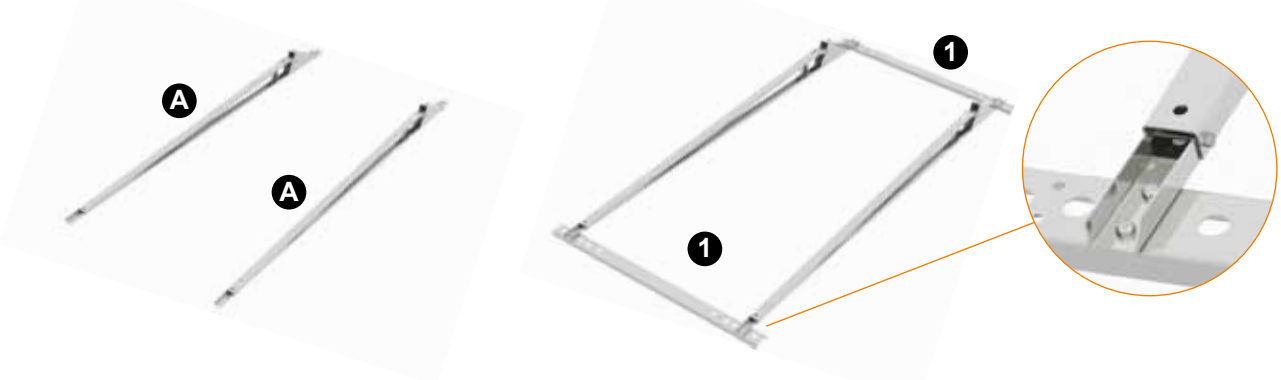

2. One of the parts **2** is placed at the bottom and tightened with M8x20 screws.

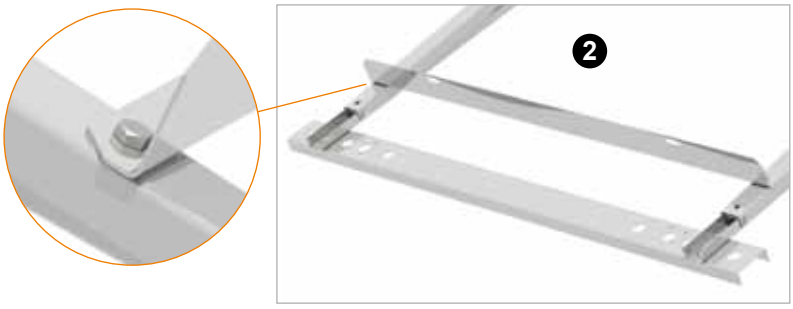

3. The second of the parts **2** is placed at the top without tightening the M8x20 screws with the nuts.

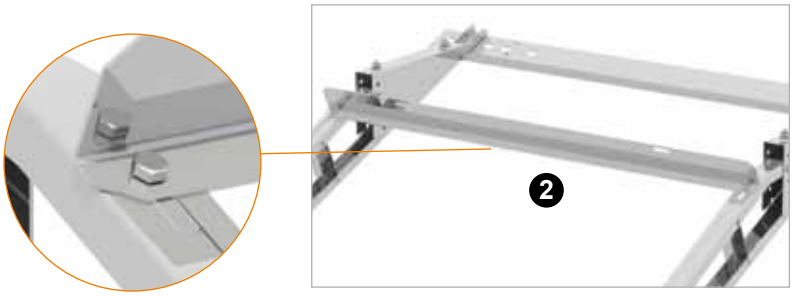

4. The four studs **3** are screwed to the respective appropriate holes in parts **1** and onto a solid internal beam of the tilled roof.

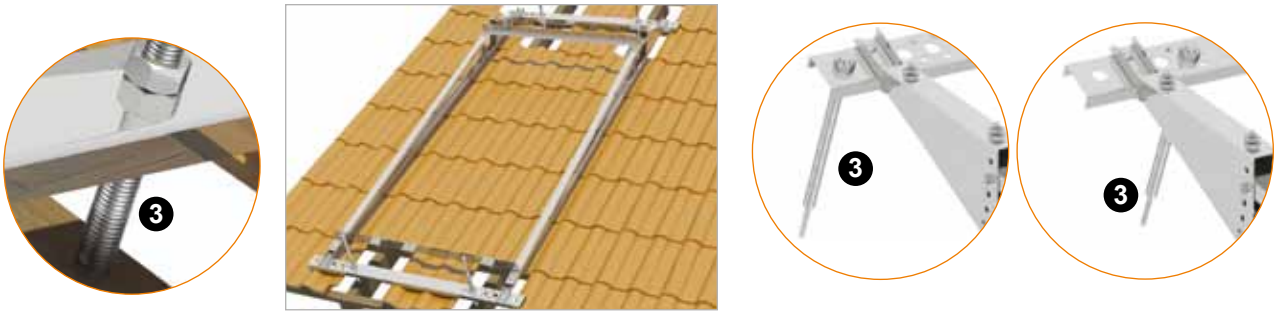

5. After angling as desired, the base is tightened onto studs **3** with the M22 nuts and washers.

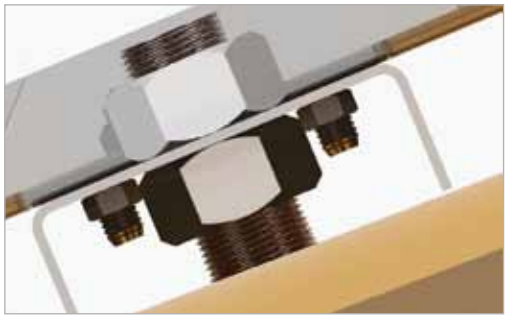

6. The collector is placed on the base with the arrows pointing up, on lower part **2**, lifting upper part **2** and screwed with the M8x20 screws onto parts **2** without tightening.

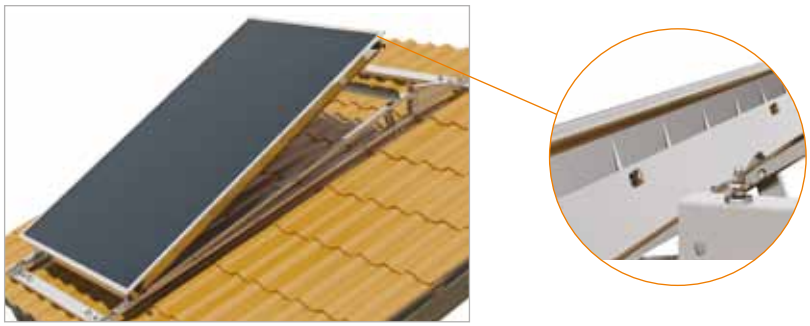

7. Using a spirit level the water tank bases **4** are leveled and the M8x60 screws are tightened.

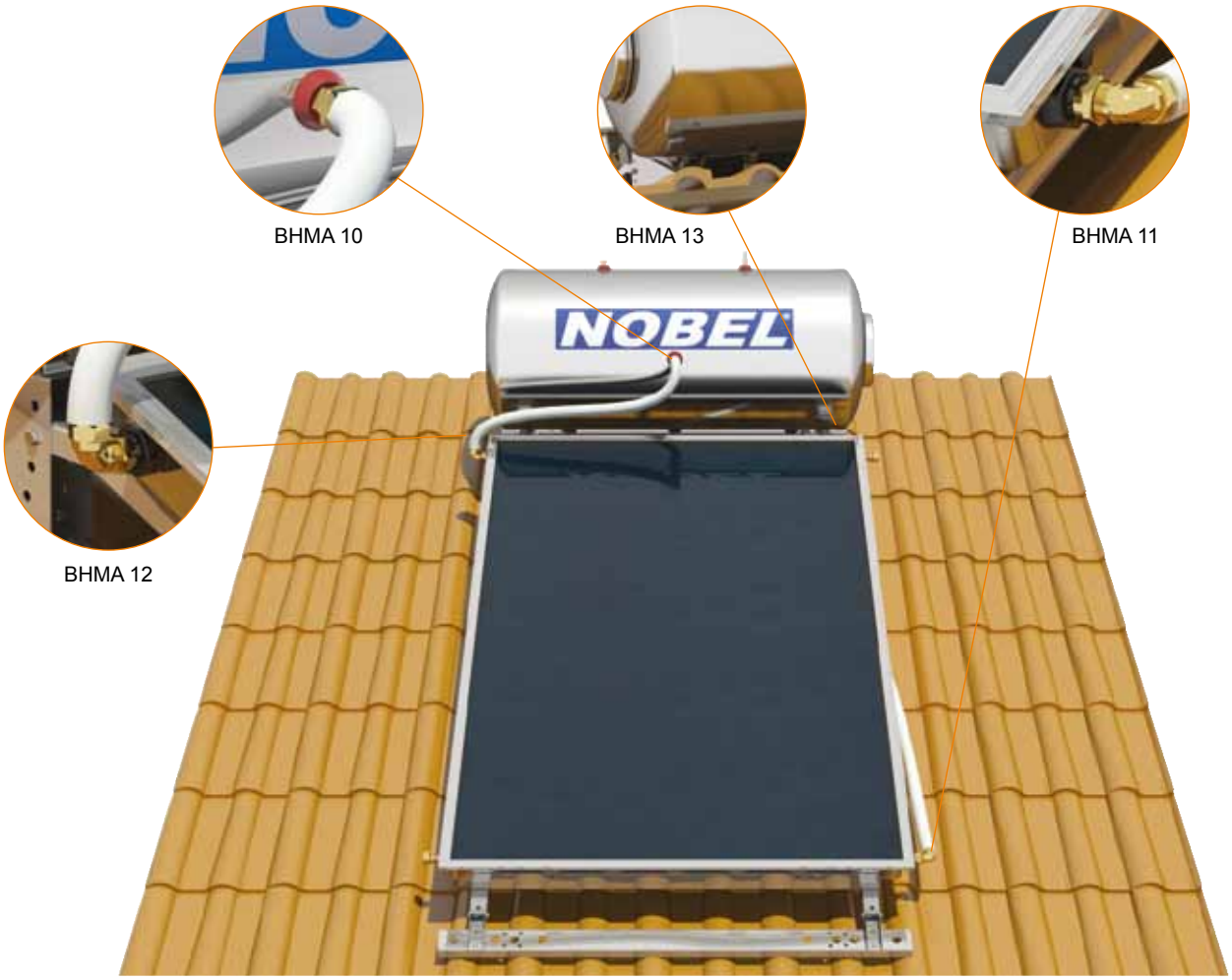

8. The water tank is placed on the bases **4** with the electrical components on the right when looking at the solar water tank from the front, and secured by tightening the M8 nuts with the M8x25screws.

9. Center the collector and tighten the M8x20 screws to parts **2**.
10. The corner female union 3/4” x DN16 INOX is screwed horizontally and to the left to the water tank at the point marked “JACKET INLET”.
11. The corner union Ø22 x DN16 INOX is screwed on to the collector’s bottom right inlet with an upwards direction.
12. The second corner union Ø22 x DN16 INOX is screwed on to the collector’s top left outlet with an upwards direction.
13. The second corner female union 3/4” x DN16 INOX is placed at the point marked “JACKET OUTLET” on the water tank.
14. The flexible connecting pipe DN16 INOX, the “JACKET OUTLET” (STEP 13) at the bottom of the water tank is joined to the bottom right inlet of the collector (STEP 11), after first having placed the relevant insulation on the pipe.
15. The flexible connecting pipe DN16 INOX is then connected to the “JACKET INLET” (STEP 10) of the water tank and to the upper left outlet of the collector (STEP 12) after first placing the relevant insulation on the pipe. The pipe must be angled upwards.

    NOTE: *Make sure the length of the insulation is greater than that of the pipes’ so that when the fittings are tightened in, all the components will be covered.*
16. All the fittings are tightened as well as the rest of the screws of the base.

SUPPORT BASE ASSEMBLY ON AN INCLINED SURFACE

ATTENTION! After the installation check that the collectors surface has a tilt angle to the horizontal position of geographical latitude ±5°.

SYSTEMS WITH 2 COLLECTORS

1. Parts **1** are screwed and tightened to parts A using the M8x20 screws, and the nuts contained in the packaging.

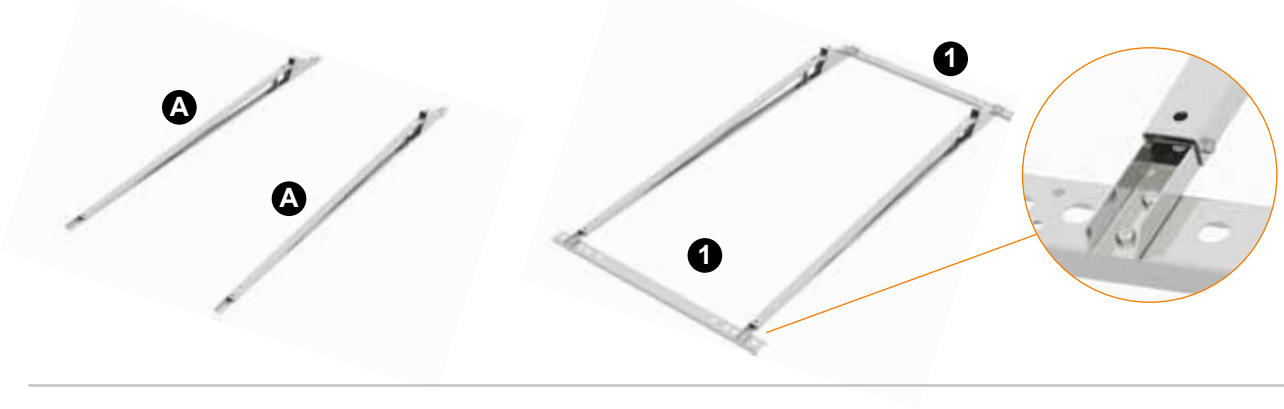

2. One of the parts **2** is placed at the bottom and tightened with M8x20 screws.

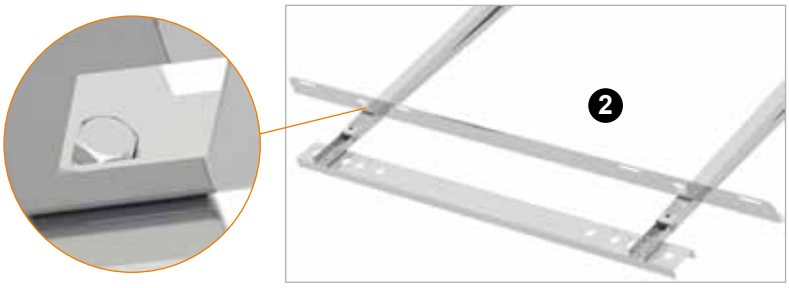

3. The second of the parts **2** is placed at the top without tightening the M8x20 screws with the nuts.

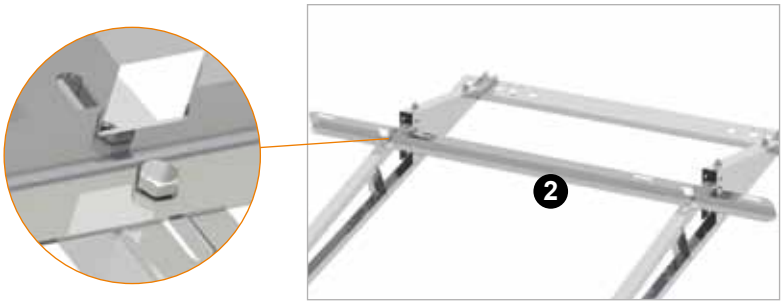

4. The four studs **3** are screwed to the respective appropriate holes in parts **1** and onto a solid internal beam of the tilled roof.

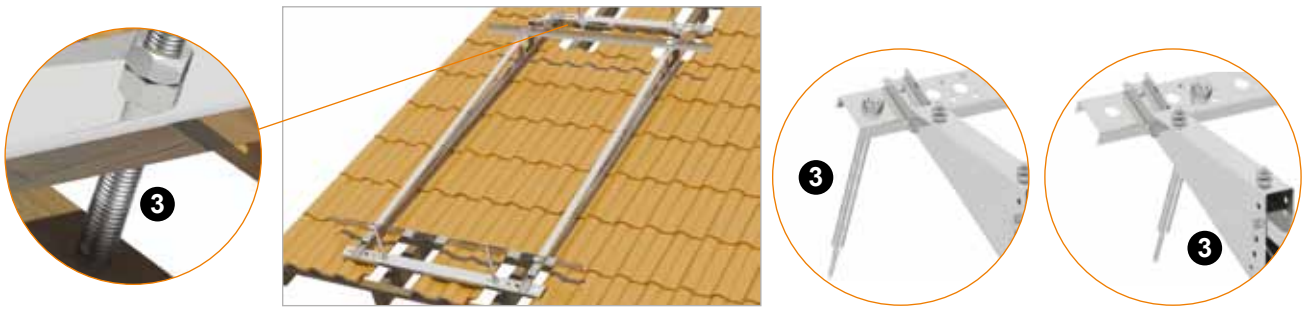

5. After angling as desired the base is tightened onto studs **3** with the M22 nuts and washers.

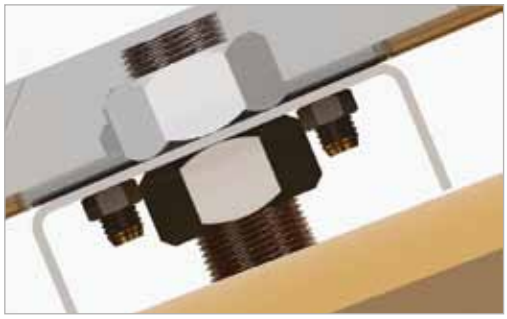

6. In case of two collectors, first place the left one to the bottom part **5** lifting the upper one. Place the screws with the support washers of the collector (4 for each collector) without tightening them. Place the T-pieces Ø22 x DN16 INOX x Ø22 unions at the edges of the collector.

7. Join the second collector without tightening the union.

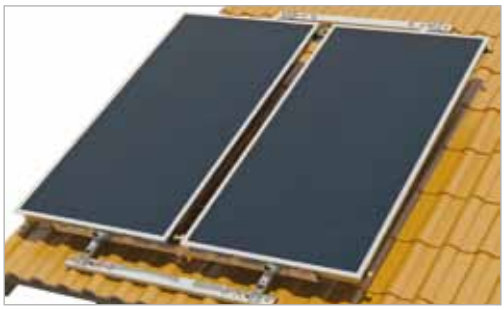

8. The collectors are screwed with M8x20 screws and washers onto parts **2** without tightening.

9. Using a spirit level the water tank bases are leveled and the M8x60 screws are tightened.

10. The water tank is placed on the bases **4** with the electrical components on the right when looking at the solar water tank from the front, and secured by tightening the M8 nuts with the M8x25 screws.

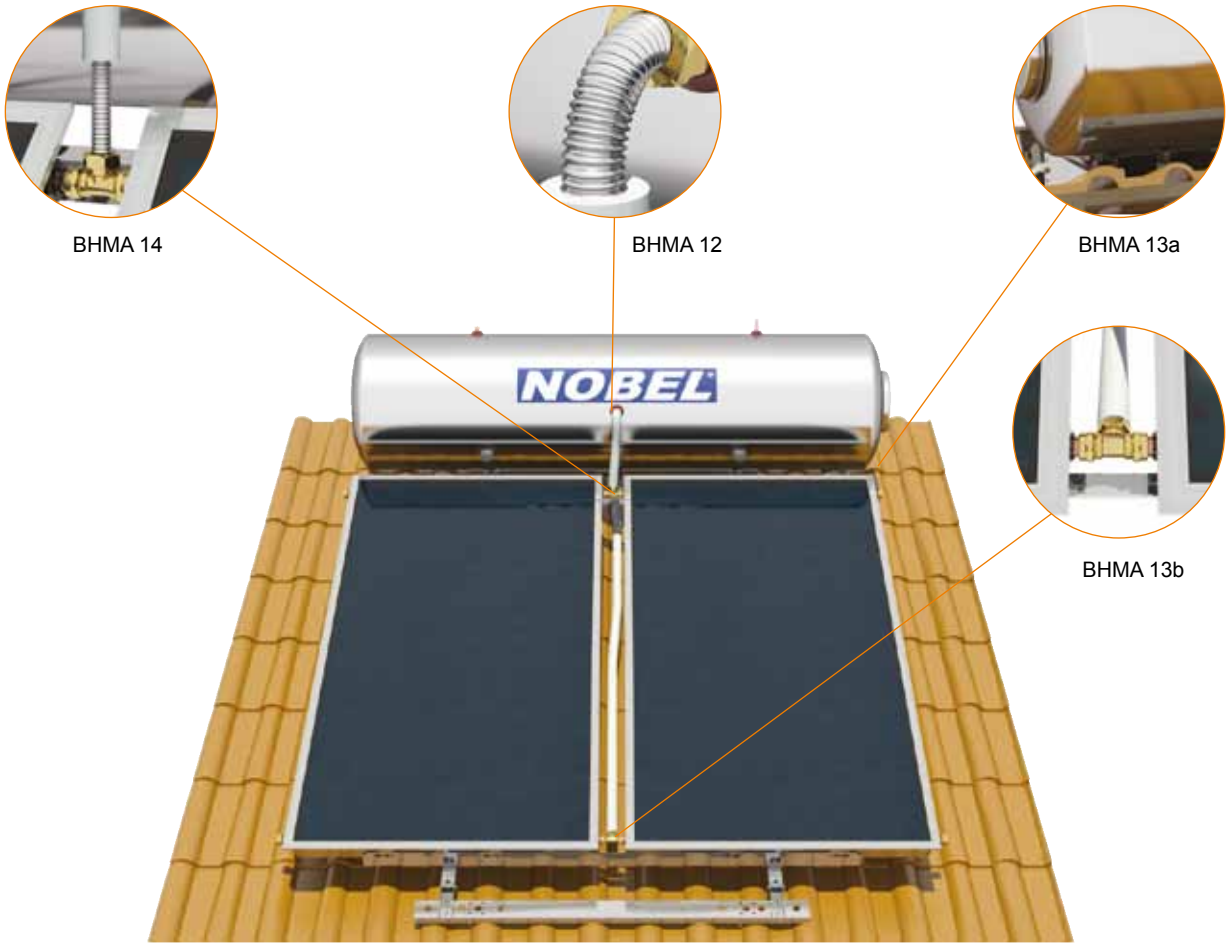

11. Center the collectors with the water tank and thighten the M8 x 20 screws to parts **2.**
12. A female union 3/4” x DN16 INOX is screwed to the water tank at the point marked “JACKET INLET”.
13. A corner union 3/4” x DN16 INOX is placed at the point marked “JACKET OUTLET” (STEP 13a). Using the flexible connecting pipe x DN16 INOX, the “JACKET OUTLET” at the bottom of the water tank is joined to the T-piece at the bottom inlet of the collectors (STEP 13b), after first having placed the relevant insulation.
14. The flexible connecting pipe x DN16 INOX is then connected to the “JACKET INLET” of the water tank and to the T-piece at the upper outlet of the collectors (STEP 14) after first placing the relevant insulation.

    NOTE: *Make sure the bottom T-piece is angled the same as the collectors, the top T-piece is vertical and the length of the insulation is greater that the respective pipe’s so that when the fittings are tightened in will cover all the components.*
15. All the fittings and T-pieces are tightened.
16. Center the collectors and tighten the M8x20 screws to parts, as well as all other screws on the base.

HYDRAULIC CONNECTION

CONNECTING THE SYSTEM WITH THE COLD AND HOT WATER MAINS

The “COLD WATER INLET” and “HOT WATER OUTLET” sockets colored blue and red respectively are located on the side of the water storage tank.

ATTENTION! The connections to the hot and cold water pipes should be made with union nuts and not by soldering.

1. Onto the “COLD WATER INLET” the hot water safety valve is screwed first, followed by a mini ball valve. The cold water pipe is then connected to the ball valve with an insulated plastic pipe Ø15.
2. The “HOT WATER OUTLET” is then connected to the hot water pipe of the consumer network through an insulated plastic pipe (Plastic pipes are recommended to minimize electro-corrosion).
3. Filling the water storage tank WITH WATER: With the ball valve and a hot water tap open, the water storage tank is allowed to be filled with cold water. When water starts to run out of the tap, the water storage tank is full and the hot water tap can be closed.

CLOSED LOOP FILLING

ATTENTION! Before starting to fill the closed loop with anti freeze liquid, the water storage tank has to be completely filled with water.

1. The antifreeze is diluted with clean water in a container and mixed until it is fully dissolved. The closed circuit cannot be filled with antifreeze unless it is first diluted with water to a ratio of 1:1.
2. The solution is fed into the water tank from the top “CLOSED CIRCUIT FILLING POINT” **(2)**. The “CLOSED CIRCUIT SAFETY VALVE CONNECTION” **(1)** is kept open to ease the bleeding of the closed circuit and is filled with water until full. The filling should be done slowly (so as to allow air bubbles to escape), and should continue until liquid overflows at the filling inlet.
3. The female 1/2” plug is placed on one pipe joint at point **(2)** and the 2.5 bar safety valve on the other at point **(1)**.
4. The female 1/2” plug and the 3.5 bar safety valve are secured on the respective water tank filling points.
5. The collectors are uncovered and the glass cleaned.
6. Following the completion of the installation, the appliance should be left for 24 hours without any hot water being used so that the closed circuit can go into operation.
7. Joint sealing. Check for leaks and make sure that all pipe joints to the collectors and the water tank, as well as the cold and hot water pipes towards the system are properly insulated, in order to avoid thermal loss and protect them from frost.

ANTI FREEZE LIQUID is an advanced, propylene glycol based special product, designed and formulated in order to ensure effective heat transfer properties at high or low temperatures. It is non-toxic and provides protection up to -37°C (solution 55% v/v with water). It is especially designed to provide excellent anticorrosion properties. In aquacius solutions anti freeze liquid offers protection according to the extent of dilution as per in the table below:

PERCENTAGE %	5	10	15	20	25	30	40	45	50	55
TEMPERATURE °C	-2	-4	-6	-8	-11	-15	-19	-24	-30	-37

ELECTRICAL CONNECTION

DESCRIPTION OF ELECTRICAL COMPONENTS (heating element - thermostat - accessories)

ELECTRICAL DIAGRAM - General rules

The electrical installation of the solar water heater should be carried out by a qualified electrician and in accordance with the national regulations in force and the rules and conditions that apply to the building where the installation is taking place.
The heating element must not be switched on when there is no water in the water storage tank.
In such case the heating element warranty does not apply.

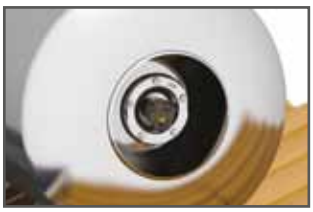

Img. 1

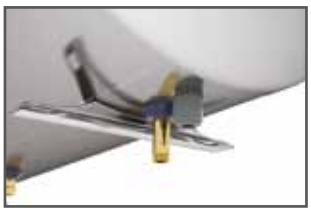

Img. 2

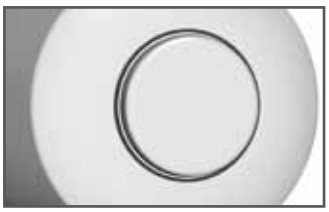

Img. 3

NOTE: *The heating element's rating depends on local regulations of the country of destination.*

1. Remove the screws from the protection flap which covers the electrical components (Img.1).
2. A 3x4mm^2 section electrical cable (for a 4kW heating element) is required to connect the heating element to the mains.
3. Pass the end of the cable through the gland and towards the electrical components (Img. 2).
4. Connect the black wire (phase) to the connector L and the blue wire (neutral) to the connector N on the thermostat. Connect the yellow wire (earthing) to the small M4 screw on the heating element marked with the ground symbol (Drawing 1).
5. The thermostat has been connected to the heating element at the factory. Adjust the thermostat to 60°C.

   ATTENTION! *The thermostat should be well fitted at the heating element (Drawing 1)*
6. Close the cover of the electrical components (Img 3)
7. Switch off the central mains switch.
8. Connect the other end of the cable to the electrical board using a bipolar disconnection switch with a minimum distance between contacts of at least 3mm. The circuit breaker's rating must be suitable for the heating element in use.

Caution! *A safety relay against electrical shock is absolutely necessary.*

NOTE: *The daily hot water (40°C) load which can be met by the system without any contribution from solar energy (that is, only through 24h 2kW heating element operation), according to 5.10 of EN 12976-2:2000, is this of maximum 1000lt.*

Drawing 1

ELECTRICAL COMPONENTS (Heating Element - Thermostat)

THERMOSTAT AUTOMATIC AUXILIARY THERMOELECTRIC FUSE F

This is tripped when the water storage tank's internal temperature exceeds 95°Cand shuts down the thermostat, to protect the appliance form overheating.

RESETTING THE THERMOELECTRIC FUSE F

Rotate the temperature regulator until the button of the thermoelectric fuse **F** appears and press it. Once the fuse has been reset to its normal operating position (pressed in), the thermostat can operate again.

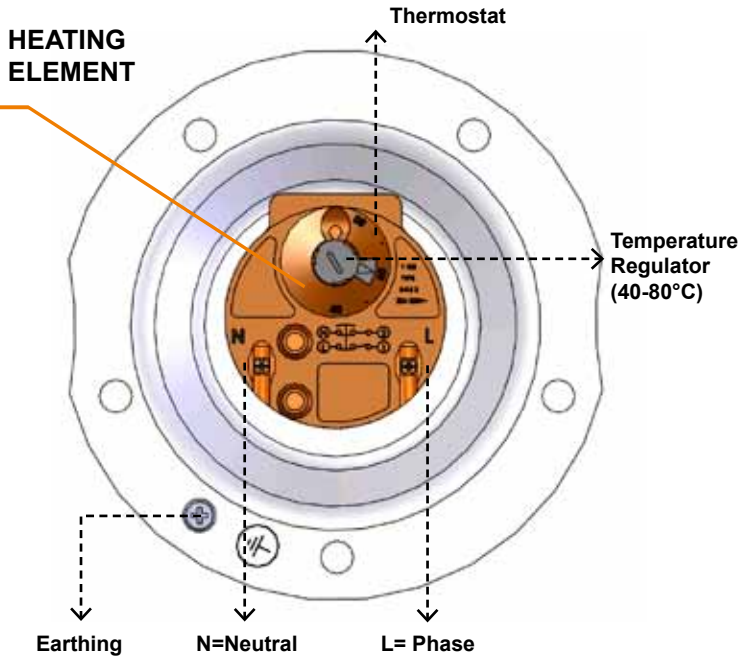

SYSTEM INSTALLATION ON A TILED ROOF WITH THE WATER STORAGE TANK UNDER THE ROOF (Natural circulation operation)

For the system's optimum operation using natural circulation, the maximum and minimum distances and angles for the pipes must be respected. The maximum distance between the collector outlet and the water storage tank inlet must not exceed 3m.
The angle of the pipe joining these 2 points must not be less than 8°.

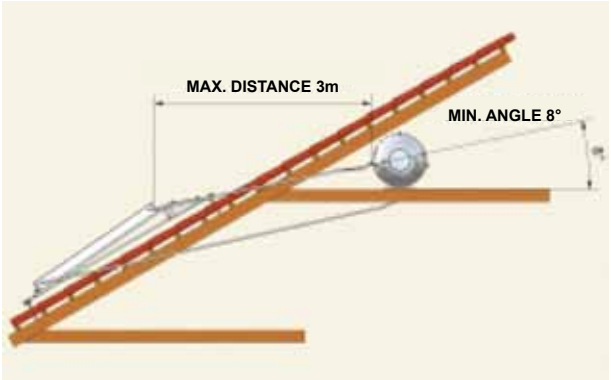

CONNECTING THE HEAT EXCHANGER

This concerns triple action solar systems equipped with a large exchange surface coil, for the alternative heating of the water using the central heating system.The coil is placed in front of the electric parts.

HYDRAULIC CONNECTION

The central heating system to which the solar system is to be connected must be equipped with:

- Solar system isolation valves.
- Automatic relief valves at the highest point of the pipes, which must be very well insulated.
- Suitably angled connecting pipes so as not to trap air in the circuit.
- The connections to the coil heat exchanger must be made through unions.

Specifically: To connect the coil heat exchangers of the solar system to the central system water storage tank, follow the STEPs below:

1. Place unions on the inlet E and on the outlet O of the exchanger.
2. Place a ball valve of suitable V diameter.
3. Place automatic relief valves D on both the water supply and return lines of the central heating water storage tank at least 20cm higher than the exchanger inlet.
4. Insulate all connecting piping with at least 9mm of insulating material.
5. Adjust the automatic filling valve AF, 1/2 bar above the static height H (e.g. for a height of 15m, it should be set to 2 bar).
6. Fill the system with water and check for leaks.

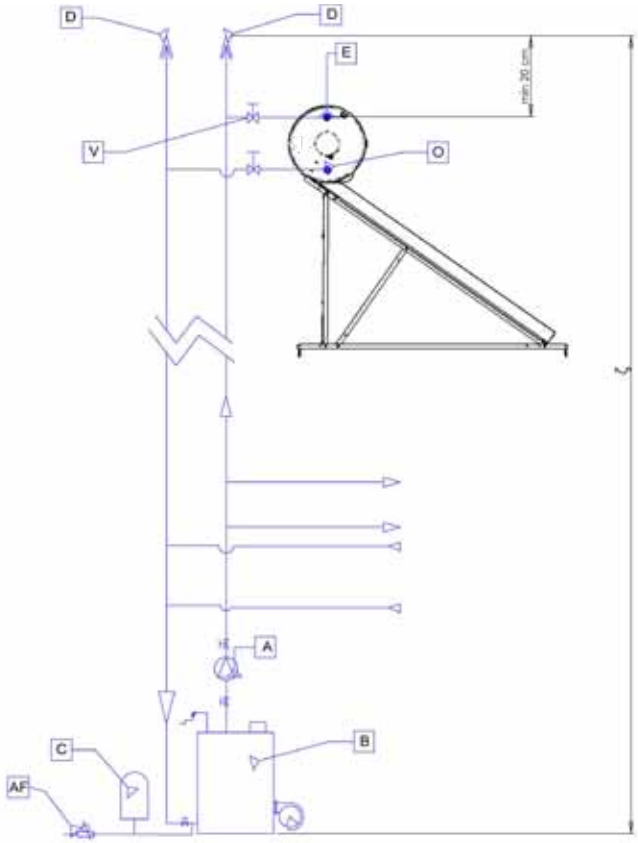

A. Circulator

B. Central heating water storage tank

C. Expansion tank

POSSIBLE PROBLEMS - SOLUTIONS

THE SOLAR WATER STORAGE TANK DOES NOT SUPPLY A SATISFACTORY AMOUNT OF HOT WATER BY SOLAR POWER

In this case follow these STEPs:

1. Take the weather conditions into consideration.
2. Avoid large hot water consumption during the night.
3. Check if your needs in hot water have increased and cannot be covered by the system's capacity.
4. Make sure your solar water heater is not shaded by any kind of obstacles,
5. Check that the system is leveled.
6. Check carefully all connections for tightness and tighten or replace any connections that are not tight.
7. Check the building's piping and taps for the possibility of slow leakage.
8. Make sure the hot water supply is not mixing with a cold water supply.
9. Make sure the connecting pipes are not kinked.
10. Check the level of the antifreeze liquid and top up if necessary.
11. Make sure there is no trapped air in the water storage tank or the collectors.

If after all the above checks you are still not satisfied with your solar system's performance, then please contact your local representative or the company's technical department.

THE SOLAR WATER STORAGE TANK DOES NOT SUPPLY HOT WATER WHEN USING THE ELECTRICAL HEATING ELEMENT

The following tasks must be carried out only by a qualified electrician.

1. Shut down the electrical supply and open the electrical components' cover.
2. Check the cable connection between the thermostat and the heating element.
3. Check the temperature at which the thermostat is set, so that it is not lower than that needed for consumption.
4. Check the heating element.
5. Check the central electrical connection.
6. Switch on the electrical current and measure the voltage at the heating element's terminals.
7. Check the thermostat's thermoelectric fuse F, which must be pressed in. If it is not, rotate the thermostat's regulator until the button of the thermoelectric fuse F appears. Press this. Once it has been reset, the thermostat can operate once again.

SERVICE - MAINTENANCE

Your solar water heater should be serviced every two years by an authorized representative or a company technician. These periodic checks are necessary for the solar water heater' s warranty to apply. The inspection concerns the whole system and more specifically:

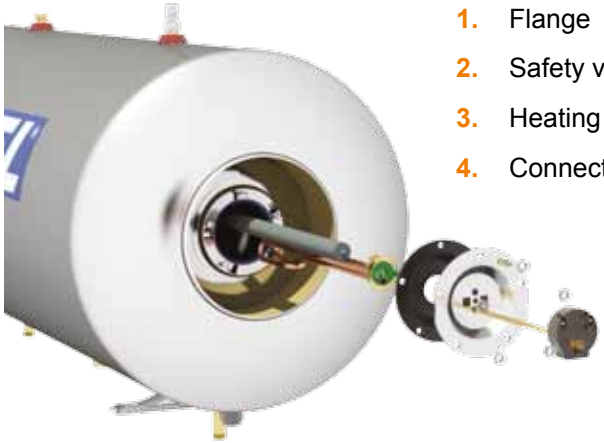

1. Flange
2. Safety valve
3. Heating element - thermostat
4. Connection fittings
5. Piping
6. Insulation - seals
7. Transparent cover (solar glass)
8. Supporting system
9. Replacement of anode and checking the closed loop's liquid. It is recommended that the water storage tank is cleaned of mineral deposits and sludge every five years.

Especially for the replacement of the anode bar follow these steps:

1. Shut down the electrical supply.
2. Empty the water from the water storage tank.
3. Remove the electrical component's cover.
4. Disconnect the three electrical wires.
5. Remove the electrical heating element by removing the M8 screws.
6. Remove the old magnesium bar from the heating element's flange.
7. Screw in the new magnesium.
8. Replace the heating element with the rubber seal.
9. Unscrew the external magnesium cap located on the water storage tank's right side.
10. Replace the sacrificial anode with a new Ø22x300mm on the cap and screw back into place.
11. Open the water supply and a hot water tap until the water storage tank fills up.
12. Check for water leaks.
13. Reconnect the electrical components at their designated positions.
14. Check that the thermostat is securely clipped to the heating element.
15. Replace the electrical component's cover.
16. Reconnect the electrical supply.

ATTENTION!

- Any intervention - work on the solar water heater must be carried out only by specialized technicians and where electrical components are concerned, only by qualified and licensed electricians.
- All solar water heater service data must be entered on the respective chart on the warranty document (term of warranty).
- In areas where extreme weather conditions are common (hail storms, storms, tornadoes, etc.) it is recommended that the appliance is insured.

POST INSTALLATION INSTRUCTIONS

Before using the system make a final check. Open all the valves and check for any kind of leakage. Repeat the inspection after 30 minutes. Check if the system is filled with water and antifreeze fluid according to the company's instructions. In case of any failure condition a specialized technician should be called in.

Following its installation, the solar water storage tank needs about 2 days in order to achieve its maximum efficiency.

For this reason it is recommended that there is no hot water consumption during the first two days following installation, even if there is ample sunshine.

A basic periodic maintenance will assure the long life and high efficiency of the solar water heater.

- It is recommended that the appliance is inspected in situ according to the instructions stated in the guarantee twice a year and checked for possible damage (breaking) of the collectors' glass, leaks in the connecting piping to the mains and to the consumption system, inspection of the pipe insulation and cleaning of the glass.
- If the collectors' glass is broken, it should be replaced immediately.
- It is recommended that the glass is washed at an hour of low sunlight to avoid damages due to expansion-contraction, due to temperature changes.
- If the fittings are worn (screws, pugs, piping, etc), these should be replaced at the owner's cost.
- The level of antifreeze in the closed circuit must be checked annually (as it could need toping up), to ensure the efficient operation.
- In cases where there is to be no use of hot water for long periods of time (e.g. during the summer holidays), it is recommended that the collector surface is covered with an opaque cover in order to avoid the building up of high temperatures, which could trip the thermoelectric fuse of the thermostat and cut the electrical circuit. (**See paragraph "RESETTING THE THERMOELECTRIC FUSE F"**).
- During the build-up of high pressure in the thermal tank, it is possible that the safety valve will open and water will run out. This is a normal function that protects the water storage tank from high pressures. If the mains pressure exceeds 4 atm., it is necessary to add a pressure reducer - expansion tank.
- Do not switch on the electrical heating element in the following cases:
  - **A)** When the mains water supply has been cut
  - **B)** When the connecting pipes have frozen and there is no water flow from the water storage tank to the taps.

Caution! Place taps with thermostatic regulation up to 38°C for hot water use to prevent burns which may be caused by the high temperature water in the solar water heater.

We remain at you disposal for any further information you may need.
We can assure you that you have made the best choice.
Thank you for choosing our products.

CHECK LIST

INSTRUCTIONS FOR THE INSTALLER

After the installation is complete, the installer, with the help of the check list below has to check all of the points which are noted and mark in the relevant column with a √.

LIST	CHECK
COLLECTORS AND EXTERNAL PIPING	
Is the installation and the fixing of the support base according to the instructions and local regulations?	
Is there an ideal location and facing of the collectors?	
Is there humidity inside the collectors?	
Are the hydraulic connections of the collectors correct?	
Has there been good UV protection on the thermal insulation?	
Is the piping properly insulated?	
Has the installment on the roof been done according to the local regulations?	
HYDRAULIC CONNECTIONS	
Are there any leaks in the closed circuit, the connections, or in the tube heat exchanger ?	
Are the safety valves installed properly?	
Does a mixing valve of hot / cold water exist?	
ELECTRICAL CONNECTION	
Is the electric resistance connected properly? (if it exists)	
Has the electric connection been done according to the local regulations? (insulation, grounding, etc...)	
GENERAL	
Was the guarantee properly filled in and given to the client?	
Were the instructions of use given to the client?	
Was the proper selection of the model made according to the needs of the client?	
Was the client informed of other options for the production of hot water?	

Installer Data

Full name.....

Address.....

Telephone.....

Distributor Data

Full name.....

Address.....

Telephone.....

METEOROLOGICAL DATA OF EUROPEAN CITIES

Paris

Town: PARIS **Country**: FR
Height: 78 meters above sea level
Longitude: -2,45 ° **latitude**: 48,97 °

Monthly values, annual total

	Jan.	Feb.	Mar.	April	May	June	July	Aug.	Sep.	Oct.	Nov.	Dec.	Year
Total global radiation [kWh/m²]	24	42,1	74,5	112	137	151	160	138	95,1	59,1	32,4	19,5	1046
Total diffuse radiation [kWh/m²]	17,1	24,8	48,1	70,9	80,5	88,4	83,4	79,2	54,7	35,8	20,3	13,8	616,7
Average ambient temperature [°C]	3,6	4,2	6,4	9,3	12,9	15,9	18	17,8	15,3	11,4	6,9	4,6	10,6
Wind speed [m/s]	4,2	4,3	4,4	4,3	3,9	3,8	3,5	3,3	3,4	3,4	4	3,9	3,9

Madrid

Town: Madrid **Country**: ES
Height: 667 meters above sea level
Longitude: 3,68 ° **latitude**: 40,42 °

Monthly values, annual total

	Jan.	Feb.	Mar.	April	May	June	July	Aug.	Sep.	Oct.	Nov.	Dec.	Year
Total global radiation [kWh/m²]	45,4	61,8	93,7	126	167	192	202	158	109	63,3	36	32,7	1287
Total diffuse radiation [kWh/m²]	27,7	37,5	61,1	79,2	92,1	93,2	79,2	88,5	56,1	43,8	26,1	22,4	707
Average ambient temperature [°C]	4,9	6,5	10	13	15,7	20,6	24,2	23,6	19,8	14	8,9	5,6	13,9
Wind speed [m/s]	-	-	-	-	-	-	-	-	-	-	-	-	-

Budapest

Town: Budapest (Kispest) **Country**: HU
Height: 112 meters above sea level
Longitude: -18,10 ° **latitude**: 47,43 °

Monthly values, annual total

	Jan.	Feb.	Mar.	April	May	June	July	Aug.	Sep.	Oct.	Nov.	Dec.	Year
Total global radiation [kWh/m²]	29,6	46,5	86,2	126	163	172	183	153	109	70,8	34,8	22,8	1197
Total diffuse radiation [kWh/m²]	19,5	27,9	47,2	70,4	86	93,4	89,7	79,5	53	38,5	23	15,6	643,5
Average ambient temperature [°C]	-1,2	1,3	5,8	11	15,9	19	20,6	20	16,1	10,7	5	0,7	10,4
Wind speed [m/s]	3	3,2	3,4	3,3	2,9	2,9	2,7	2,5	2,6	2,6	2,9	2,9	2,9

Roma

Town: Roma Ciampino **Country**: IT
Height: 121 meters above sea level
Longitude: -12,60 ° **latitude**: 41,80 °

Monthly values, annual total

	Jan.	Feb.	Mar.	April	May	June	July	Aug.	Sep.	Oct.	Nov.	Dec.	Year
Total global radiation [kWh/m²]	56,6	72,6	119	154	192	202	216	187	143	103	61,2	48,4	1556
Total diffuse radiation [kWh/m²]	30,1	36	57	72,1	87,7	85,1	80,8	65	61,2	42	30,8	24,2	671,9
Average ambient temperature [°C]	6,2	7,1	9,7	12,3	16,5	20,6	23,7	23,3	19,6	15,4	11,5	7,6	14,5
Wind speed [m/s]	-	-	-	-	-	-	-	-	-	-	-	-	-

Limassol

Town: Limassol **Country**: ZY
Height: 0 meters above sea level
Longitude: -33,00 ° **latitude**: 34,67 °

Monthly values, annual total

	Jan.	Feb.	Mar.	April	May	June	July	Aug.	Sep.	Oct.	Nov.	Dec.	Year
Total global radiation [kWh/m²]	76,9	100	147	172	212	226	227	205	168	134	96	75,5	1839
Total diffuse radiation [kWh/m²]	36,3	45,9	55,9	75,1	79,9	64,7	66,7	71,2	51,8	47,2	34,6	32	661,2
Average ambient temperature [°C]	13,1	13,1	14	16,4	19,3	22,5	25,1	26,3	25,7	23	18,6	15,1	19,3
Wind speed [m/s]	2,1	1,5	2,1	5,6	4,6	4,6	5,1	4,6	4,1	2,1	2,1	1,4	3,3

NOTES

NOTES

V.1 - JUN. 2012

NOBEL
SOLAR INNOVATIONS

XILINAKIS D. & Co
SOLAR & ELECTRIC WATER HEATING SYSTEMS INDUSTRY

EXPORT DEPARTMENT: 25 I. Nika, 136 73 Acharnes - Greece | Tel.: +30 210 2478677 - Fax: +30 210 2407185

HEADQUARTERS: 23 Nerantzoulas, 136 77 Acharnes - Greece | Tel.: +30 210 2404051 - Fax: +30 210 2443444

e-mail: info@nobel.gr

www.nobel.gr